PEACHTREE CITY
PLAN TO STAY™

LOCAL DESIGN MANUAL

2016 EDITION

CITY OF PEACHTREE CITY

LOCAL DESIGN MANUAL | 2016 EDITION

Contents

PART I | STORMWATER 1

1. Forward 1
   1.1. Meeting the Stormwater Management Requirements of the City 1
   1.2. Definitions 2
2. Design Performance Requirements 3
   2.1. Discharge Standards to Adjacent Properties and Right-of-Ways 3
   2.2. Conveyance Systems Standards 8
   2.3. Flood Elevation Impacts 11
   2.4. Minimum Finished Floor Elevation Adjacent to Stormwater Structures 11
3. Materials and Design Specification Requirements 13
   3.1. Conveyance Structures 13
   3.2. Detention Ponds 16
   3.3. Water Quality Best Management Practices 23
   3.4. Easement Requirements 23
4. Approved Hydrologic & Hydraulic Methods 25
   4.1. Hydrologic Methods 25
   4.2. Hydraulic Methods 25
   4.3. Channel Protection Design 25
5. Special Districts 26
6. Hydrologic & Hydraulic Report Requirements 27
   6.1. Hydrologic & Hydraulic Report Checklist / Certification 27
   6.2. Project Narrative 27
   6.3. Existing Conditions Hydrologic Analysis 27
   6.4. Post-Development Hydrologic Analysis 29
   6.5. Downstream Analysis 31
   6.6. Stormwater Management System Design 32
   6.7. Planting Plan (if applicable) 34
   6.8. Operations & Maintenance Plan 34

PART II – TRANSPORTATION **35**

APPENDICES **36**

Appendix A – Stormwater Hydrologic & Hydraulic Checklist

Appendix B – American Concrete Pipe Association LRFD Fill Height Tables

Appendix C – General Peachtree City Technical Specifications for Drainage Systems

Appendix D – Construction Details

Part I | Stormwater

1. Forward

This manual is meant to serve as a comprehensive guide to implementing stormwater management system requirements in The City of Peachtree City. Additionally, the manual is designed to supplement the Georgia Stormwater Management Manual (GSMM) 2016 Edition, which shall serve as the technical manual for design and specification of individual components within the system.

1.1. Meeting the Stormwater Management Requirements of the City

The following outlines the process for developing a stormwater management plan for issuance and maintenance of a site development permit in the City.

Pre-Design Phase

Step 1 Check for new special district requirements with the City staff

Step 2 Check for concept plan submittal requirements

Step 3 Prepare concept plan (if required)

Step 4 Submit concept plan to the City and schedule concept pan meeting (if required)

Step 5 Meet with City staff to discuss concept plan (highly recommend)

Design Phase

Step 6 Prepare stormwater management plan

Step 7 Submit stormwater management plan to the City for approval

Construction Phase

Step 8 After receiving approval from the City begin construction

Step 9 Coordinate construction with the City inspection staff during construction

Post-Construction Phase

Step 10 After construction prepare As-Built Survey and As-Built Design Certification

Step 11 Adjust stormwater structures if necessary

Step 12 Execute stormwater inspection and maintenance agreement for all private on-site stormwater management facilities

Step 13 Secure Certificate of Occupancy / Final Plat

1.2. Definitions

"Adverse impact" shall apply to situations where the post development discharge rates, up to and including the 100-year storm event, exceed those determined for the pre-developed conditions per basin at the property line of individual property lines at the time of development. It shall also include situations where development will cause an increase in flood elevations on adjacent properties.

"Freeboard" area of containment above the design storm event.

"Hotspot" is defined as a land use or activity on a site that produces higher concentrations of trace metals, hydrocarbons, or other priority pollutants than are normally found in urban stormwater runoff. Examples of hotspots include gas stations, vehicle service and maintenance areas, industrial facilities such as salvage yards (both permitted under the Industrial General Permit and others), material storage sites, garbage transfer facilities, and commercial parking lots with high-intensity use.

"Low cord" the lowest part of the bridge deck structure or stringers whichever is lower.

"Site" means the area of development or redevelopment.

"Structural development" means construction, installation or expansion of a building or other structure.

"Impervious development" means the creation or addition of impervious surfaces, or the replacement of impervious surface not part of routine maintenance.

2. Design Performance Requirements

2.1. Discharge Standards to Adjacent Properties and Right-of-Ways

Development plans including site grading and drainage plans should be developed to minimize disruption of natural drainage patterns on properties. The site shall be analyzed to determine the changes between the baseline conditions and proposed conditions for drainage area, discharge rate, and discharge volume at every point along the property line as stormwater is discharged onto an adjacent property or existing right-of-way. The baseline conditions shall be a based upon the existing conditions of the site and shall model any depression storage and / or detention storage if deemed necessary by the design professional of record for the project or City Engineer. If off-site areas discharge onto the site, the baseline conditions for these areas shall be analyzed based on the existing conditions at the time of the analysis. The development shall be analyzed for the following storm events:

- 2-year 24-hour Design Storm
- 5-year 24-hour Design Storm
- 10-year 24-hour Design Storm
- 25-year 24-hour Design Storm
- 50-year 24-hour Design Storm
- 100-year 24-hour Design Storm

2.1.1. Discharge Rates

It is the policy of the City of Peachtree City that no increases in stormwater runoff discharge rates as reported to the nearest tenth of one cubic foot per second (0.1 cfs) shall be allowed above the baseline conditions from any point along the property line as stormwater is discharged onto an adjacent property or existing right-of-way.

2.1.2. Changes to Drainage Area

It is the policy of the City of Peachtree City that no increase in drainage area to a single discharge point greater than 10% of the total area of the predevelopment drainage area or 1 acre whichever is less for that point shall be allowed without considering the impacts to the total runoff volume. If drainage areas are substantially changed (greater than 10% or 1 acre whichever is less), then the design professional of record shall add a statement to the hydrologic and hydraulic report stating that in their professional opinion, no adverse impacts to downstream properties will occur as a result of the changes in the drainage basin areas. Where the City Engineer finds that there is a potential threat to downstream properties from proposed development activities, the City Engineer may require additional study to document the impacts on adjacent property.

For the purposes of satisfying the additional study requirements, the design professional of record shall:

- Document the increase in volume (measured in cubic feet) of stormwater runoff for each storm event as a result of basin transfer
- Identify existing downstream conditions and impacts from the proposed conditions including flow volumes and peak flow rates
- Document that the channel is capable of handling the additional volume without becoming unstable due to increased velocities and duration of flooding

In-lieu of this statement, the developer may secure a drainage easement between the developer and the downstream property owner(s) including, but not limited to, any parties that have a lien or security interest in the property to satisfy this requirement. A copy of the recorded easement must be included in the hydrologic and hydraulic report that includes language showing that the downstream property owner(s) acknowledges the increase in runoff and/or volume and holds harmless the City of Peachtree City and its agents if the project is approved. Easements shall continue to a point downstream where the runoff would have naturally drained to in a pre-development condition or the downstream analysis point, whichever occurs first.

2.1.3. Downstream Analysis

All hydrologic analyses shall be continued to a point downstream where the site represents at least 10% of the total drainage area. The analysis shall include study points along the drainage path where the drainage path crosses the following:

- Property Lines / Rights-of-Way
- Culverts / Pipe Systems
- Detention Ponds / Ponds / Lakes
- Drainage Path Confluences of Significance
- Public Infrastructure (i.e. water, sewer, etc.)

Where a detention pond, pond, or lake is encountered, the design professional shall model the impacts of the proposed development on the detention pond, pond, or lake to determine if the development will cause an increase in the maximum water surface elevation at each storm event. If access cannot be reasonably obtained or as-built surveys of the facility are not available from the City or local government with jurisdiction, the design professional of record may add a statement to the hydrologic and hydraulic report stating that in their professional opinion, no adverse impacts including increases in maximum water surface elevations to the detention pond, pond, or lake will occur as a result of the development. This statement shall include a description of the location of the detention pond, pond, or lake. A separate statement shall be required for each detention pond, pond, or lake not studied.

It is not the intent of this downstream analysis requirement to require the design professional of record to analyze streams or rivers with very large watersheds (greater than 2,000 acres) as part of this effort. The downstream analysis may be terminated at a point immediately upstream of a point (if the 10% requirement has not been met) where the site represents 0.5% of the total drainage area or 2,000 acres whichever is less. However, this modification shall not apply to developments that exceed 100 acres in size.

The downstream analysis shall be conducted to demonstrate that no increases in stormwater runoff rate occur downstream of the property / site for either the 25-year or 100-year storm event unless otherwise noted above. The City Engineer may require analysis of additional storm events where a downstream condition warrants further study.

Example A:
Suppose there is a 2-acre site draining into a small drainage feature (such as a swale or pipe system) that has a total drainage area of 15 acres and then discharges into a creek with a 4,000-acre drainage area. In this example, the design professional of record shall terminate the downstream analysis at the point where the total drainage area is 15-acres. Although the 10% rule has not been met since the drainage area would be 20 acres at a typical 10% analysis point, the requirement to analyze a 4,000 acre watershed would be overly burdensome to the developer and likely outside of the technical expertise of a typical site development engineer.

Example B:
Suppose there is a 2-acre site draining into a small drainage feature (such as a swale or pipe system) that has a total drainage area of 15 acres and then discharges into a creek with a 380-acre drainage area. In this example, the design professional of record shall terminate the downstream analysis at the confluence point of the small drainage area and the creek with the 380-acre drainage area and shall include the larger drainage area. At this point, the 10% rule has been satisfied without exceeding the 0.5% (400-acres) total drainage area limit for a 2-acre site or the 2,000-acre maximum drainage area.

The design professional of record is strongly encouraged to discuss the downstream analysis requirements with the City Engineer prior to beginning any design for the project to determine the specific requirements and study points / elements.

2.1.4. Water Quality Standards

Stormwater management systems shall be designed to retain or treat the runoff from 85% of the storms that occur in an average year, and reduce average annual post-development total suspended solids loadings by 80%. Averaged from rainfall events across the state of Georgia, this equates to treating storm events of 1.2 inches or less, as well as the first 1.2 inches of runoff for all larger storm events.

The City Engineer will waive the water quality treatment requirement if 100% of the 1.0 inch runoff reduction volume (RRv) is achieved. If the entire 1.0-inch runoff reduction standard cannot be achieved, the remaining runoff from the 1.2-inch rainfall event must be treated by BMPs to remove at least 80% of the calculated average annual post-development TSS loading from the site.

This standard is quantified and expressed in terms of engineering design criteria through specification of the water quality volume (WQv), which is equal to the runoff generated on a site from 1.2 inches of rainfall. The WQV must be treated to the 80% TSS removal performance goal.

This standard assumes that BMPs will be designed, constructed and maintained according to the criteria in the GSMM. Stormwater discharges from land uses or activities with higher or special potential pollutant loadings may require the use of specific structural practices and pollution prevention practices. A detailed overview of BMPs is provided in Chapter 4 of the GSMM.

For further discussion on this standard, see Section 2.2.4.1 of the GSMM.

The City encourages the designer to implement specific stormwater credits for reducing the water quality treatment requirements on site. These credits can be found in Section 2.3.3 of the GSMM. However, the City recognizes that water quality treatment of stormwater runoff from certain areas of a site is not feasible. As such, the following areas are exempt from water quality treatment.

- Impervious surfaces associated with the driveway located within the City's existing right-of-way assuming that runoff from the driveway drains away from the site and into the right-of-way
- Portions of the site which will remain undisturbed and which does not drain to a water quality or detention facility / BMP. These undisturbed areas must contain at least 10,000 square feet of contiguous area. Additionally, these areas must not be used for any purposes during construction and must be protected from such activities by construction fencing or other means to prevent construction personnel ingress.

Additional water quality requirements will be required for hotspot land uses and activities regulated by the National Pollutant Discharge Elimination System (NPDES) Industrial General Stormwater Permit.

2.1.5. Channel Protection Standards

Channel protection shall be provided for each discharge point from the site unless meeting the exemption criteria (as determined by the City Engineer) outlined below. Channel protection shall be accomplished by providing for 24-hour extended detention of the 1-year 24-hour storm event.

Channel protection shall not be required if one of the following criteria is applicable to an outfall point on the site:

- Point discharges that do not exceed 2 cubic feet per second for the 1-year 24-hour storm in a post developed condition
- Sheet flow discharges that do not have more than 100 feet of contributing drainage area assuming that no impervious surfaces are within the contributing drainage area
- Point or sheet flow discharges from drainage areas consisting entirely of undisturbed lands on the site
- Point discharges which drain directly to a long piped drainage system and which the City has determined that the outfall of the system will not experience significant channel erosion as a result of not providing channel protection via extended detention of the 1-year 24-hour storm
- Point discharges which drain directly to streams, rivers, wetlands, lakes or other scenarios where reduction of the 1-year 24-hour storm will in the opinion of the City Engineer result in no impact to downstream channel integrity. Point discharges that drain to the buffer areas adjacent to large streams, rivers, wetlands or lakes will still require channel protection in most cases.

For additional discussion, see Section 2.2.4.2 of the GSMM.

2.1.6. Energy Dissipation

Energy dissipation shall be employed whenever the velocity of flows leaving a new stormwater facility exceeds the erosion velocity of the downstream area or 4.0 feet per second whichever is less for the 25-year storm. Energy dissipation shall be designed according to the standards in the GSMM. Evaluation of the stability of the downstream channel below the energy dissipation device/improvement must take place to see if additional downstream protection/stabilization is required due to increased flow volumes for the 25-year storm event.

2.2. Conveyance Systems Standards

2.2.1. Bridges

All new bridges shall be designed to accommodate the 100-year 24-hour design storm with the 100-year flood elevation 1-foot below the low cord of the bridge (i.e. the lowest part of the bridge deck structure or stringers whichever is lower). The 100-year flood elevation shall be the higher of the existing or future condition elevations. If such a flood elevation has not been computed, the flood elevation shall be computed with a means acceptable to produce FEMA floodplain elevations.

2.2.2. Culverts & Pipe Systems

The level of service provided by new culverts and pipe systems in the City is dependent on a number of different factors. These include the type of road that the system will service, the potential for upstream flooding, floodplain impacts and other service issues. Generally, the level of service to be provided by culverts in Peachtree City as outlined in the table below:

Roadway Classification* / Use	Design Storm
Arterial/Emergency Evacuation Roadway/Community Collector	100-Year
Village Collector/Neighborhood Collector	50-Year
Local Roads/Parking Lots	25-Year
Roads with No Other Outlet	100-Year
Material Storage Areas/Landscape Areas	10-Year

*As shown on the City's Thoroughfare Plan

The levels of service standards outlined above are considered minimum standards. Where warranted, in cases of a threat to property, structures or human safety, the level of service may be increased at the discretion of the designer or the City Engineer. Pipes shall be designed such that the hydraulic grade line (HGL) shall remain within the pipe for the applicable design storm. For example, the HGL for a 48-inch (4-feet) diameter pipe should not exceed 4 feet above the pipe invert. The City Engineer will allow exceptions on a case by case basis for pipes that are designed around extenuating circumstances (generally excessive tailwater conditions, etc.).

Culverts with contributing drainage areas greater than 25 acres shall be designed to the 24-hour storm. For example, if a culvert is to be designed to convey stormwater runoff from a 25-acre drainage basin under a neighborhood road, the design storm shall be a 25-year 24-hour storm.

The design must also take into account undeveloped offsite areas. An increase in the C-factor (or CN as applicable) for this area according to proposed land use must be added to the design as an added safety factor and the future condition 100-year design storm must be calculated based on the future land use plan for Peachtree City.

The hydraulic grade line must be calculated and shown on plans for the design storm. Additionally, a 100-year design storm shall be calculated and analyzed to determine the impact; regardless of the design storm.

If a culvert is designed to connect to an existing system of a differing design level of service, then the system with the greater design requirement will be used to size the proposed system.

If a drainage system is designed to discharge to residential property, it must be extended from the right-of-way or upstream structure to the rear of the residential lot.

The minimum pipe velocity for the 2-year storm shall be 2.5 feet per second unless otherwise approved by the City Engineer. The maximum pipe velocity for the design storm shall be 12 feet per second.

2.2.3. Inlets (Catch Basins, Yard Inlets, Drop Inlets, Hooded Grate Inlets and Flumes)

Inlets collecting stormwater runoff from street surfaces and area inlets shall be sized to capture the storm event specified for the pipe system to which it drains and a maximum flooding depth as determined by the following table:

Roadway Classification/Use	Design Storm	Flooding Depth
Arterial/Emergency Evacuation Roadway/Community Collector	100-Year	½ Lane Width + Gutter or 8 Feet Whichever is Less
Village Collector/Neighborhood Collector	50-Year	½ Lane Width + Gutter or 8 Feet Whichever is Less
Local Roads	25-Year	½ Lane Width + Gutter or 8 Feet Whichever is Less
Roads with No Other Outlet	100-Year	½ Lane Width + Gutter or 8 Feet Whichever is Less
Parking Lots (with a check of the 100-year storm flooding depth and maximum 1-foot depth)	25-Year	Maximum 0.5 ft. Depth
Detention Areas utilized for other purposes with general public access (i.e. parking lot detention, etc.) with flood warning sign	100-Year	Maximum 2.9 ft. Depth
Material Storage Areas / Landscape Areas with flood warning sign if area is utilized by the public (with a check of the 100-year storm flooding depth)	10-Year	Maximum 1.5 ft. Depth

*Gutter spread measured from face of curb.

**Inlets and grading adjacent to habitable structures shall be designed to prevent stormwater runoff from entering the structure during the 100-year design storm.

2.2.4. Inlets (Headwalls, Flared End Sections, etc.)

Inlets that utilize the opening of the pipe as the inlet (i.e. headwalls, flared end sections, etc.) shall be sized to capture the storm event specified for the pipe system to which it drains. The HGL should be designed to be no less than 18 inches below the point at which water would bypass the inlet (i.e. low point of the road, bypass to another inlet, etc.). Additionally, the headwater to diameter, as determined by the height of the pipe if not round, or Hw/d ratio shall not exceed 1.2

The headwater conditions induced by the inlet should not cause an impact on any upstream drainage structures such that the upstream structure will realize a loss in performance due to elevated tailwater conditions. In simpler terms, the headwater from an inlet should not back water into another culvert or drainage system. This requirement may be waived by the City Engineer in situations where it would not be feasible to design the culverts due to proximity of the culverts or shallow grades between the culverts. In these cases, the design professional of record shall provide a detailed analysis showing no impacs to structures or overtopping of roadways will occur due to the proposed design.

2.2.5. Roadside Ditches / Drainage Channels

Roads constructed without curb and gutter shall incorporate ditches where necessary that are designed to the specific design storms. The level of service provided by the ditches shall match the level of service provided by a comparable pipe system as outlined above. A minimum of ½ foot of freeboard shall be required for all ditches or channels. The level of service standards are considered minimum standards, where warranted the level of service may be increased at the discretion of the designer or at the request of the City of Peachtree City when a threat to property, structures or human safety is present.

Culverts traversing a roadside ditch shall be sized to the same standard as the ditch it crosses. The culvert shall be sized such that the headwater from the culvert does not cause runoff to overflow the ditch cross section and drain to other areas. All other pipe requirements for the culvert shall apply as required in this manual.

For constructed drainage channels designed to convey stormwater runoff either from or to a culvert, the channel should be sized, at a minimum, to accommodate the same storm event specified for the pipe system. Channels designed to convey stormwater runoff to detention ponds shall be sized to accommodate the 100-year design storm.

2.3. Flood Elevation Impacts

It is the policy of the City of Peachtree City that raising the elevation of flooding (regardless of whether it is in a studied FEMA floodplain or not) on an adjacent property either upstream or downstream shall not be acceptable. As such, the level of service standards outlined above shall be considered minimum standards. Where flood elevations on an adjacent property will be increased due to development and/or construction of a drainage system, the level of service may be increased by the City to result in no impact on flood elevations to the adjacent property. This requirement may be waived at the City Engineer's discretion if the adjacent property owner provides a permanent drainage easement between the two property owners sufficient to cover the area of any increase in flood elevation to the adjacent property. The easement shall provide that the owner of the impacted property acknowledges that an increase in flood elevations will occur on their property as a result of the proposed development, and must also include the approval of any other persons who have an interest in the property including, but not limited to, any parties that have a lien or security interest in the property. Additionally, the easement shall include at a minimum a map showing the extent of the pre-development and post-development 100-year flood elevations. The easement must be provided to the City with Hydrologic & Hydraulic Report and recorded with the deed records at the Office of the Clerk of the Superior Court of Fayette County, Georgia, as an attachment to the affected property's land deed and shall be binding on all future property owners. Finally, any proposed increases in flood elevation that would occur within a FEMA identified floodplain will also comply with all applicable FEMA regulations for increases in flood elevation.

2.4. Minimum Finished Floor Elevation Adjacent to Stormwater Structures

The provisions of the Peachtree City Flood Damage Prevention ordinance shall apply to all developments within the City of Peachtree City. However, if a structure, as defined in the Flood Damage Prevention ordinance, is located upstream of a public or private stormwater system, the structure may be required to be elevated above the standards of the Flood Damage Prevention ordinance. Generally, the City will require the minimum finished floor elevation to be at least 1-foot above the point at which water will by-pass the system. It is the intent of this provision to ensure that structures will not be flooded by runoff if the stormwater system were to become inoperable due to damage or blockage by debris. If the City Engineer believes or determines that the 1-foot minimum elevation will not be sufficient to protect upstream homes, the City Engineer may increase the requirement. In these cases, the City Engineer may increase this requirement to 1-foot above the 100-year flood elevation during the 100-year 24-hour future conditions design storm event assuming that the applicable stormwater system is inoperable.

For example, suppose several residential homes are to be constructed adjacent to a drainage channel. Immediately downstream of the homes is a road crossing with a low roadway crossing elevation of approximately 902.50 and a computed existing conditions 100-year flood elevation of 898.50 and a future conditions 100-year flood elevation of 899.50. Generally, the Flood Damage Prevention ordinance requires that the minimum finished floor elevation of the homes be set at 3-feet above the existing flood elevation or 1-foot above the future flood elevation. The minimum finished floor elevation for the homes in this example would be established as 901.50 under the Flood Damage Prevention ordinance. However, if the culvert under the roadway were to become clogged, it is probable that the roadway would be overtopped at the 100-year storm event and possibly at much smaller storm events. In this scenario, the homes would be flooded by at least 1-foot of flood water and probably more. As such, the provisions of this section would supersede the minimum finished floor elevation requirements of the Flood Damage Prevention ordinance and require the minimum finished floor to be established as 903.50 by adding 1-foot to the low roadway crossing elevation of 902.50.

3. Materials and Design Specification Requirements

3.1. Conveyance Structures

3.1.1. Pipes within City Owned Right-of-Way

All pipes located under roadways, and within the public right-of-way of said roadways, and that are (or will in the future) accepted by the City of Peachtree City for long-term maintenance, shall be constructed of reinforced concrete pipe (RCP) meeting Georgia Department of Transportation Standards (GDOT) with a minimum 18-inch diameter or height (for non-circular pipes). All pipes must have a minimum of 12 inches of cover from the exterior crown of the pipe or bell, and in accordance with manufacturer's specifications (if greater than 12 inches). Pipes directly under pavement must have a minimum of 12 inches of cover above the exterior crown of the pipe or bell to the bottom of the roadway base (i.e. Graded Aggregate Base). The City Engineer may allow less cover on a case-by-case basis and must be provided in writing prior to approval of the plans. Prior to approval of lessening of the cover requirements, the designer must demonstrate why the cover requirements cannot be met to the satisfaction of the City Engineer.

Non-circular pipes and culverts shall meet the same material requirements as above. However, if a live bottom arch culvert or box culvert is to be utilized, aluminum structural plate may be utilized at the discretion of the City Engineer assuming the structure can meet applicable load requirements for the roadway classification.

This section shall apply to any pipe that originates or terminates within the public right-of-way regardless if any portion falls outside of the right-of-way. If the designer decides to transition from RCP to another material outside of the right-of-way, then a junction box shall be added at the right-of-way line to facilitate the transition.

RCP pipe class shall conform to the American Concrete Pipe Association LRFD Fill Height Tables. A copy of the tables can be found attached to this manual.

Design engineer shall provide a concrete storm pipe construction detail on the construction plans customized to the specific project being designed. The detail must show minimum and maximum cover depths, the bedding type and backfill requirements for each class of concrete pipe used based on the American Concrete Pipe Association design standards. If multiple classes of pipes are used on a project a table may also be used to supplement this detail.

3.1.2. Pipes Outside City Owned Right-of-Way

Pipes not located under roadways or within the public right-of-way of said roadways, and that are (or will in the future) accepted by the City of Peachtree City for long-term maintenance, shall be constructed of the following materials:

- Reinforced Concrete Pipe (RCP)
- Aluminum (Does not include ferrous metal pipe such as aluminized or coated)
- High Density Polyethylene Pipe (HDPE)
- High Density Polypropylene Pipe (HP)
- Ductile Iron Pipe (DIP)

All pipe must meet the specifications of the Georgia Department of Transportation (GDOT) with a minimum 18-inch diameter or height (for non-circular pipes). Non-circular pipes and culverts shall meet the same material requirements as above. RCP must have a minimum of 12 inches of cover above the exterior crown of the pipe or bell, and in accordance with manufacturer's specifications (if greater than 12 inches). All other pipes must have a minimum of 48 inches of cover above the exterior of the pipe. The City Engineer may allow less cover on a case-by-case basis and must be in writing prior to approval of the plans. Prior to approval of lessening of the cover requirements, the designer must demonstrate why the cover requirements cannot be met to the satisfaction of the City Engineer.

All pipe systems which are to be accepted by the City of Peachtree City for long-term maintenance shall provide an adequate easement as outlined below.

All pipes which are installed in an area that will be dedicated to the City for maintenance must be video inspected at the developers' expense prior to the City accepting responsibility for the pipe. Defects shall be repaired by the developer at their expense.

RCP pipe class shall conform to the American Concrete Pipe Association LRFD Fill Height Tables. A copy of the tables can be found attached to this manual. Other pipe materials shall specified on the plans (including specific manufacturer and product), shall conform to manufacturer's recommended specifications for fill heights, and shall include specific manufacturer's specifications.

Design engineer shall provide a storm pipe construction detail on the construction plans customized to the specific project being designed. The detail must show minimum and maximum cover depths, the bedding type and backfill requirements for each type of pipe used based on the manufacturer's design standards. If multiple types or classes of pipes are used on a project a table may also be used to supplement this detail.

3.1.3. Minimum / Maximum Slope for Pipe Systems

Where feasible, pipes should be designed with a minimum slope of 1 vertical foot per 100 horizontal feet (i.e. 1%). Pipes will be allowed at slopes less than 1% where topography and / or design constraints mandate a more shallow pipe slope and the engineer can demonstrate that minimum flow velocities can be achieved for the 2-year storm. The maximum pipe slope shall be 10% for concrete pipe and 14% for other materials. Where necessary, a drainage structure can be added to allow for a drop in the system inverts to meet the maximum pipe slope requirements. However, the maximum drop inside a manhole shall be 10-feet.

3.1.4. Maximum Pipe Length

No storm drain pipe shall exceed 300-feet in length as measured from the centerline of the upstream structure to the centerline of the downstream structure.

3.1.5. Pipe Systems not to be Dedicated to the City of Peachtree City

Pipes not to be dedicated to the City shall be specified to the specifications of the owner but shall meet the design specifications outlined in Section 2.2.2.

3.1.6. Channels

Channels should be designed in such a manner as to provide for longitudinal slopes that result in design velocities that minimize erosion / channel scour but not less than 100-feet horizontal to 1-foot vertical (1%) unless approved by the City Engineer. Those channels that have increased velocities over 4.0 feet per second for the 25-year 24-hour storm must be protected from erosion through the use of rip-rap, concrete, erosion control matting, permanent vegetation or other method acceptable to the City for stabilization of the channel. Additionally, all channel side slopes shall have a 3-foot horizontal to 1-foot vertical (3:1) slope or less and a minimum bottom with of 3 feet.

3.1.7. Inlets / Outlets / Junction Boxes

All inlets, outlets, and junction boxes shall be constructed of materials and methods approved by the Georgia Department of Transportation and /or designs pre-approved by The City of Peachtree City. Covers (where appropriate) shall be designed and manufactured in accordance with local construction standards related to storm drain stenciling and pollution prevention education. The Owner and/or designer shall consult The City of Peachtree City regarding specific requirements for storm drain covers and inlets. Safety End Sections shall be used for pipes beginning or ending in right-or-way. Hooded Grate Inlets are not allowed in City right-of-way or easements without prior approval. No manhole shall exceed 15-feet in depth as measured from the invert of the outlet pipe to the top of the structure.

3.2. Detention Ponds

All detention facilities constructed in accordance with the requirements of this manual shall be constructed on subdivided parcels deeded to the property owner. If the pond is in a residential subdivision, it is to be on a parcel dedicated to the City as green belt. This parcel must have proper access as is outlined below. No detention facility for residential subdivisions shall be constructed in whole or part on a parcel or lot intended for sale to a future resident. This requirement shall not apply to non-residential developments; however a proper maintenance agreement shall be submitted to the City outlining the responsible party.

3.2.1. Dry Earthen Detention Ponds to be Dedicated to the City of Peachtree City

The applicable standards outlined in the GSSM and the following design guidelines shall be required of all dry detention ponds including dry extended detention ponds to be dedicated to the City of Peachtree City for perpetual maintenance:

3.2.1.1. General Geometry

- Dry detention ponds shall be designed to provide for positive drainage on the pond floor to the outlet of the pond such that the pond will return to a dry state after each storm event.
- Side slopes for the dam shall be designed to have 3-feet horizontal to 1-foot vertical (3:1) slopes or flatter.
- Slopes not associated with the dam shall be designed to have 3-feet horizontal to 1-foot vertical (3:1) slopes or flatter. However, the City may accept slopes that are up to 2-feet horizontal to 1-foot vertical (2:1) slopes on a case by case basis if the designer can demonstrate that construction of a flatter slope is not technically feasible.
- The top width of the dam shall be based upon the height of the dam as measured from the channel elevation at the downstream toe of the dam to the crest elevation of the dam as follows.

Height of Dam	Width of Top of Dam
Up to 6-feet	10-feet
6-feet to 10-feet	12-feet
10-feet to 15-feet	14-feet
15-feet to 20-feet	15-feet

- The dam shall not have a potential impoundment storage capacity in excess of 80 acre-feet (as measured from the crest elevation of the dam) without prior approval of the City Engineer.

- The height of the dam as measured from the channel elevation at the downstream toe of the dam to the crest elevation of the dam shall not exceed 20-feet without prior approval of the City Engineer.
- The maximum 100-year 24-hour design water surface elevation shall be at least 1-foot below the dam crest measured vertically.
- Trees shall be removed from the dam and immediate vicinity (10-feet from the toe of dam). Trees removed from the dam shall include roots and other woody materials that extend into the dam.

3.2.1.2. Grading and Compaction of Dam Materials

- Acceptable backfill and fill materials shall consist of suitable soils for dam construction as determined by the City; free of rock or gravel larger than 1-inch in any dimension, debris, waste, frozen materials, vegetation, and other deleterious matter.
- Backfill and fill materials shall be placed in layers not more than eight inches in loose depth for material compacted by heavy compaction equipment, and not more than four inches in loose depth for material compacted by hand-operated tampers.
- Each layer should be uniformly moistened or aerated before compaction to within 3% of optimum moisture content.
- Layers should not be placed on surfaces that are muddy, frozen, or contain frost or ice.
- All backfill and fill materials shall be placed evenly to required elevations, and uniformly along the full length of the embankment.
- All backfill and fill materials shall be compacted to at least 95% maximum dry unit weight according to ASTM D 698.
- Concrete walls shall not be allowed by the City of Peachtree City for any detention pond dam to be accepted by the City of Peachtree City for long term ownership or maintenance.

3.2.1.3. Pipes Through the Dam

- Pipes placed within the dam shall be RCP with a minimum slope of 1-foot vertical fall per 100 linear feet of pipe (i.e. 1%) unless otherwise approved by the City Engineer.

3.2.1.4. Outlet Structures

- Outlet Control Structures shall be constructed of concrete

- Outlet Control Structures shall be checked for buoyancy with the assumption that all openings are clogged and water has pooled to the top of the dam crest. If the calculations demonstrate that the weight of a "dry" structure does not exceed the weight of potentially displaced water, then ballast shall be added. Calculations for each outlet control structure shall be provided in the hydrological study.
- Trash racks shall be added to all orifices, weirs, and other openings if the smallest dimension for each orifice / weir is less than 1-foot.

3.2.1.5. Emergency Spillway

- An emergency spillway shall be constructed such that flows exceeding the 100-year storm event shall pass through spillway.
- The spillway shall be capable of passing the 100-year storm event assuming the primary outlet structure(s) is clogged. In more simple terms, the designer shall demonstrate through modeling that starting in a dry condition, the 100-year storm event is capable of passing through the emergency spillway without utilizing any other outlets and without overtopping the dam.
- The emergency spillway shall be a separate structure from the primary outlet control structure / pipe and shall consist of an earthen spillway in residual soils where possible.

3.2.2. Dry Earthen Detention Ponds Not to be Dedicated to the City of Peachtree City

Dry detention ponds that will not be dedicated to the City of Peachtree City for perpetual maintenance shall be designed to the applicable standards outlined in the GSMM and as follows:

3.2.2.1. General Geometry

- The dam shall not have a potential impoundment storage capacity in excess of 80 acre-feet (as measured from the crest elevation of the dam) without prior approval of the City Engineer.
- The height of the dam as measured from the channel elevation at the downstream toe of the dam to the crest elevation of the dam shall not exceed 20-feet without prior approval of the City Engineer.
- The maximum 100-year 24-hour design water surface elevation shall be at least 1-foot below the dam crest measured vertically.

3.2.2.2. Emergency Spillway

- An emergency spillway shall be constructed such that flows exceeding the 100-year storm event shall pass through spillway.

- The spillway shall be capable of passing the 100-year storm event assuming the primary outlet structure(s) is clogged. In more simple terms, the designer shall demonstrate through modeling that starting in a dry condition, the 100-year storm event is capable of passing through the emergency spillway without utilizing any other outlets and without overtopping the dam.
- The emergency spillway shall be a separate structure from the primary outlet control structure / pipe.

3.2.3. Wet Ponds to be Dedicated to the City of Peachtree City

The applicable standards outlined in the GSSM and the following design guidelines shall be required of all wet ponds including extended detention ponds, micro pools, and stormwater wetlands to be dedicated to the City of Peachtree City for perpetual maintenance:

3.2.3.1. General Geometry

- Side slopes for the dam shall be designed to have 3-feet horizontal to 1-foot vertical (3:1) slopes or flatter.
- Slopes not associated with the dam shall be designed to have 3-feet horizontal to 1-foot vertical (3:1) slopes or flatter. However, the City may accept slopes that are up to 2-feet horizontal to 1-foot vertical (2:1) slopes on a case by case basis if the designer can demonstrate that construction of a flatter slope is not technically feasible.
- The top width of the dam shall be based upon the height of the dam as measured from the channel elevation at the downstream toe of the dam to the crest elevation of the dam as follows.

Height of Dam	Width of Top of Dam
Up to 6-feet	10-feet
6-feet to 10-feet	12-feet
10-feet to 15-feet	14-feet
15-feet to 20-feet	15-feet

- The dam shall not have a potential impoundment storage capacity in excess of 80 acre-feet (as measured from the crest elevation of the dam) without prior approval of the City Engineer.
- The height of the dam as measured from the channel elevation at the downstream toe of the dam to the crest elevation of the dam shall not exceed 20-feet without prior approval of the City Engineer.

- The maximum 100-year 24-hour design water surface elevation shall be at least 1-foot below the dam crest measured vertically.
- The minimum freeboard at normal pool shall be at least 3-feet.
- Concrete walls shall not be allowed by the City of Peachtree City for any detention pond dam to be accepted by the City of Peachtree City for long term ownership or maintenance.

3.2.3.2. Grading and Compaction of Dam Materials

- Acceptable backfill and fill materials shall consist of suitable soils for dam construction as determined by the City; free of rock or gravel larger than 1-inch in any dimension, debris, waste, frozen materials, vegetation, and other deleterious matter.
- Backfill and fill materials shall be placed in layers not more than eight inches in loose depth for material compacted by heavy compaction equipment, and not more than four inches in loose depth for material compacted by hand-operated tampers.
- Each layer should be uniformly moistened or aerated before compaction to within 3% of optimum moisture content.
- Layers should not be placed on surfaces that are muddy, frozen, or contain frost or ice.
- All backfill and fill materials shall be placed evenly to required elevations, and uniformly along the full length of the embankment.
- All backfill and fill materials shall be compacted to at least 95% maximum dry unit weight according to ASTM D 698.

3.2.3.3. Pipes Through the Dam

- Pipes placed within the dam shall be RCP with a minimum slope of 1-foot vertical fall per 100 linear feet of pipe (i.e. 1%) unless otherwise approved by the City Engineer.
- Pipes that are constructed to pass through the dam at an elevation less than 3 feet above the normal pool shall include a 6-inch concrete mud mat, concrete cradle poured to the spring line of the pipe, and a collar drain to collect seepage along the outside of the pipe. (See Appendix B)

3.2.3.4. Outlet Structures

- Outlet Control Structures shall be constructed of concrete

- Outlet Control Structures shall be checked for buoyancy with the assumption that all openings are clogged and water has pooled to the top of the dam crest. If the calculations demonstrate that the weight of a "dry" structure does not exceed the weight of potentially displaced water, then ballast shall be added. Calculations for each outlet control structure shall be provided in the hydrological study.
- Trash racks shall be added to all orifices, weirs, and other openings if the smallest dimension for each orifice / weir is less than 1-foot

3.2.3.5. Emergency Spillway

- An emergency spillway shall be constructed such that flows exceeding the 100-year storm event shall pass through spillway.
- The spillway shall be capable of passing the 100-year storm event assuming the primary outlet structure(s) is clogged. In more simple terms, the designer shall demonstrate through modeling that starting at the normal pool, the 100-year storm event is capable of passing through the emergency spillway without utilizing any other outlets and without overtopping the dam.
- The emergency spillway shall be a separate structure from the primary outlet control structure / pipe and shall consist of an earthen spillway in residual soils where possible.

3.2.3.6. Water Balance

- A water balance simulation will be required for all wet ponds except micro pools and shall be documented in the hydrologic report for the development.

3.2.4. Wet Ponds Not to be Dedicated to the City of Peachtree City

Wet ponds that will not be dedicated to the City of Peachtree City for perpetual maintenance shall be designed to the applicable standards outlined in the GSMM and as follows:

3.2.4.1. General Geometry

- The dam shall not have a potential impoundment storage capacity in excess of 80 acre-feet (as measured from the crest elevation of the dam) without prior approval of the City Engineer.
- The height of the dam as measured from the channel elevation at the downstream toe of the dam to the crest elevation of the dam shall not exceed 20-feet without prior approval of the City Engineer.
- The maximum 100-year 24-hour design water surface elevation shall be at least 1-foot below the dam crest measured vertically.

3.2.4.2. Outlet Structures

- Outlet Control Structures shall be checked for buoyancy with the assumption that all openings are clogged and water has pooled to the top of the dam crest. If the calculations demonstrate that the weight of a "dry" structure does not exceed the weight of potentially displaced water, then ballast shall be added. Calculations for each outlet control structure shall be provided in the hydrological study.

3.2.4.3. Pipes

- Pipes that are constructed to pass through the dam at an elevation less than 3 feet above the normal pool shall include appropriate seepage controls as determined by the design engineer. If seepage controls are not deemed not necessary, the engineer of record shall add a statement to the construction plans indicating such.

3.2.4.4. Emergency Spillway

- The spillway shall be capable of passing the 100-year storm event assuming the primary outlet structure(s) is clogged. In more simple terms, the designer shall demonstrate through modeling that starting at the normal pool, the 100-year storm event is capable of passing through the emergency spillway without utilizing any other outlets and without overtopping the dam.
- The emergency spillway shall be a separate structure from the primary outlet control structure / pipe and shall consist of an earthen spillway in residual soils where possible.

3.2.4.5. Water Balance

- A water balance simulation will be required for all wet ponds except micro pools and shall be documented in the hydrologic report for the development.

3.2.5. Dry Underground Detention Ponds

No underground detention pond shall be constructed on residential development projects. Underground detention ponds may be considered on non-residential development projects after the designer has shown that construction of an aboveground detention pond is infeasible (unable to be constructed due to site or environmental reasons and proof of such is provided to, and the underground detention pond is thereafter approved by the City Engineer) to the satisfaction of the City. If allowed, all structures which are designed to store water shall be constructed of reinforced concrete or HDPE unless otherwise approved as outlined in section 4.1.1 and 4.1.2 above. Additionally, the structures should be designed such that vehicular traffic meeting an H-20 loading standard could traverse the area over the detention pond once backfilled or completed. The pond shall also be designed with access ports of a minimum 12-inch diameter such that all portions of the pond can be inspected via a pole camera or similar device from the

ground surface. When designing the pond, the designer should design the structure such that routine maintenance can be accommodated without unreasonable demands being placed on future property owners. As such, these facilities are to be referenced in the covenants or on the final plat, and recorded with the City and in the deed records with the maintenance agreement accompanied by a site plan illustrating the location of the pond at the Office of the Clerk of the Superior Court of Fayette County, Georgia so that future land owners know of its existence and duty to maintain.

3.2.6. Fencing Requirements for Detention Ponds

Fencing may be required as determined by the current City Fencing Policy.

3.3. Water Quality Best Management Practices

3.3.1. General Practice Structural Controls

Generally, the City of Peachtree City will accept all BMPs listed within the GSMM (Volume II, Chapter 4) with the accepted removal efficiencies listed in Table 4.1.3-1 and runoff reduction rates listed in Table 4.1.3-2 of the GSMM. The City Engineer may restrict the use of specific structural controls on projects where the control is to be dedicated to the City for perpetual maintenance without regard if the control has been approved on other developments. The developer / designer will be required to select an alternate control to meet the requirements for water quality control. In cases where the City Engineer rejects a specific control on a project, the City Engineer shall provide written comments on the grounds by which the control was rejected.

3.3.2. Proprietary Structural Controls

Generally, the City of Peachtree City does not allow proprietary structures such as hydrodynamic, vortex separators, catch basin inserts, chemical treatment etc. to be utilized in Peachtree City. Proprietary structural controls may be allowed by the City Engineer on a case by case basis if the proprietary structural control has been through the Georgia Technology Assessment Protocols (GTAP) for the evaluation of Stormwater Treatment process. Prior to approving the device for use in Peachtree City, the City Engineer shall document the performance standards, maintenance requirements, and conditions under which the device may be utilized for all future developments. The City Engineer may restrict the use of proprietary structural controls on projects where the control is to be dedicated to the City for perpetual maintenance regardless if the control has been approved on private developments.

3.4. Easement Requirements

All drainage systems (pipes, junction box etc.), BMP's (ponds etc.) or stormwater conveyance (swales etc.) areas which will be accepted by the City for long term maintenance must provide adequate easement and greenbelt space for maintenance to be completed. These easements must conform to the following and are good practice for private development:

3.4.1. City Maintained Detention Ponds (wet, micropool, dry, etc.)

A 20 foot access easement will be required for all City Maintained Detention Ponds. This easement is to allow access from the closest public street or right of way and must be graded in a manner in which entry is possible. (not graded on a severe slope and is passable for maintenance equipment, i.e. 4 feet horizontal for every 1 foot vertical)

In addition to the access easement, a 20 foot maintenance easement will be required around the pond and must be graded in a manner in which entry is possible. (not graded on a severe slope and is passable for maintenance equipment, i.e. 4 feet horizontal for every 1 foot vertical)

3.4.2. Drainage Pipe Easements

All drainage pipe easements are to be the diameter of the pipe plus four times the depth of the pipe plus an additional 2 feet on either side of the pipe as shown below. At minimum this easement must be 20-feet and under no circumstance may the easement be within the influence zone of a structural foundation. Additional building set-backs shall be added to the plan as necessary to ensure that structures are not constructed within the easements. This easement width is to account for the required trench and slopes to safely maintain or replace drainage structures at a future date.

Easement Width = Pipe diameter + (4 X Pipe Depth) + 4 feet or 20-feet whichever is greater

The easement may be stepped up or down in width in 1-foot increments to accommodate the required widths.

3.4.3. Drainage Swales and Ditches

All drainage swales and/or ditches will have an easement which is the total width of the conveyance (including the side slopes) plus 5 feet on either side of the top of slope.

4. Approved Hydrologic & Hydraulic Methods

4.1. Hydrologic Methods

4.1.1. Rational Method

The rational method may be used to develop peak runoff flows for culverts with contributing drainage areas less than 25 acres in size. All computations shall be in accordance with the GSMM (Volume2). Rainfall intensities shall be derived from Table A-2 of Appendix A of the GSMM (Volume 2).

4.1.2. NRCS TR-55 Method (Also Known As SCS Method)

In most cases, the NRCS TR-55 Method must be utilized to size detention ponds and culverts with contributing drainage areas greater than 25 acres. All computations shall be in accordance with Section 3.1.5 of the GSMM (Volume 2). Rainfall depths shall be derived from Appendix A of the GSMM (Volume 2).

4.2. Hydraulic Methods

All hydraulic calculations shall be made in accordance with the GSMM (Volume 2).

4.3. Channel Protection Design

Outlets to provide for meeting channel protection criteria shall be designed to meet the standards outlined in section 3.4.3 and other applicable sections of the GSMM (Volume 2).

5. Special Districts

The City may establish special design criteria for select areas based on the findings of watershed assessments, hydrologic and hydraulic reports, and known flooding issues. The designer shall consult with the City Engineer to determine if any special watershed districts exist within Peachtree City. Conditions for which these districts may be established are as follows:

- Findings of adverse water quality conditions as established by the Georgia Environmental Protection Division, such as a TMDL for any given stream
- Areas of repetitive loss of structures due to flooding
- Areas of adverse water quality conditions as determined though the City's annual water quality sampling.

6. Hydrologic & Hydraulic Report Requirements

Prior to issuance of final site plan approval, all development projects must submit a hydrologic and hydraulic report outlining the impacts of the site on the stormwater system. At a minimum, this report must be in the format of attached Appendix A include the following sections:

- Hydrologic & Hydraulic Report Checklist / Certification
- Project Narrative
- Existing Conditions Hydrologic Analysis
- Post-Development Hydrologic Analysis
- Stormwater Management System Design
- Downstream Analysis
- Planting Plan (if applicable)
- Operations & Maintenance Plan

The following subsections outline the requirements for each of the elements outlined above. It is important that each section be written up as directed and included in the report in as simple and concise of a nature as possible. While inclusion of printouts from the hydrologic modeling software is encouraged, please note that the City receives multiple reports every year and each one may use a different program to analyze site conditions. As such, it is difficult for the City to review reports that do not include sufficient detail in the report to determine if the design meets compliance with the applicable regulations. Given this, the City will reject any report where the report is unclear if important items cannot be determined to be in compliance or are missing.

6.1. Hydrologic & Hydraulic Report Checklist / Certification

The first section of the Hydrologic & Hydraulic Report shall consist of a completed Hydrologic & Hydraulic Report Checklist which can be found in Appendix A. The Checklist shall be signed by the Engineer of Record for the project and include the certification statement. Failure to include the checklist as the first item in the report will result in ***automatic rejection*** of the report and no further review will be conducted of the report until it is revised accordingly.

6.2. Project Narrative

The report should include a brief narrative outlining the project goals and location, as well as a location map such that the project location can be identified by City staff or other readers of the report.

6.3. Existing Conditions Hydrologic Analysis

The existing conditions hydrologic analysis should provide the reader with a comprehensive evaluation of the site conditions prior to development of the project. The designer should provide the following information with this element of the report:

6.3.1. Existing Conditions Narrative

A written description of the existing conditions found at the site should be provided. Additionally, the narrative should describe the methodologies, assumptions and other pertinent discussions of how the existing conditions were analyzed by the designer.

6.3.2. Existing Conditions Map

An existing conditions map should be provided with the report including but not limited to following:

- Topography (2-ft. or less contour interval) of existing site conditions
- Perennial / intermittent streams, State waters, wetlands, lakes and other surface water features
- Drainage basin delineations showing the location of each drainage sub-basin
- Drainage basin delineations for each contributing drainage basin upstream of the project site on an appropriate map (USGS Quadrangle, etc.)
- Existing stormwater conveyances and structural control facilities
- Direction of flow and discharge points from the site including sheet flow areas
- Paths utilized for the computation of Times of Concentration
- Any area of significant depression storage
- Federal, state and local buffers
- Land use areas delineated with acreage and run-off coefficient/curve number

The map should provide a clear understanding of the various drainage patterns located throughout the site as well as drainage onto the site from upstream areas. Additionally, the map should provide a clear view of the natural features of the site that may impact development.

6.3.3. Existing Conditions Tables

A set of tables should be included in the report that will allow the reader to understand how various parameters utilized in modeling the existing conditions were developed. Additionally, tables should be included documenting the results of the modeling.

- A table listing the land cover characteristics, hydrologic soil group, curve number, and acreage for each sub-basin

Example Table for Existing Conditions Sub-basin 1

Land Cover	Hydrologic Soil Group	Curve Number	Area (acre)
Woods	B	55	1.25
Impervious Surface	B	98	3.46
Open Space	B	61	6.38

- A table listing the total acreage, composite curve number and time of concentration for each sub-basin

Example Table for Existing Conditions Sub-basin Summary

Sub-Basin	Area (acre)	Curve Number	Tc (minutes)
Sub-Basin 1	11.09	72	18.2
Sub-Basin 2	2.57	88	5.0
Sub-Basin 3	3.45	82	8.9

- A table listing the peak runoff rates for each discharge point from the property or site

Example Table for Existing Conditions Peak Runoff Rates Summary (cubic feet per second)

Sub-Basin	2-Yr	5-Yr	10-Yr	25-Yr	50-Yr	100-Yr
Point 1	23.5	45.9	52.8	60.3	69.7	79.3
Point 2	16.8	26.8	37.1	49.5	62.9	78.6

- A table listing the peak runoff rates and maximum water surface elevations for all detention facilities studied as part of the existing conditions analysis

Example Table for Pond Summary

Sub-Basin	2-Yr	5-Yr	10-Yr	25-Yr	50-Yr	100-Yr
Pond 1	18.2	25.3	32.8	40.1	46.5	50.3
Discharge / Peak Elev	898.12	899.35	901.56	902.65	903.12	903.55

6.3.4. Existing Conditions Model Diagram

A diagram of the hydrologic model should be provided with the report showing how the model was developed and each node is connected.

6.4. Post-Development Hydrologic Analysis

The proposed conditions hydrologic analysis should provide the reader with a comprehensive evaluation of the site conditions following the development of the project. The designer should provide the following information with this element of the report:

6.4.1. Proposed Conditions Narrative

A written description of the proposed conditions to be found at the site after construction should be provided. Additionally, the narrative should describe the methodologies, assumptions and other pertinent discussions of how the proposed conditions were analyzed by the designer.

6.4.2. Proposed Conditions Map

A proposed conditions map should be provided with the report including but not limited to following:

- Topography (2-ft. or less contour interval) of proposed site conditions
- Perennial/intermittent streams, State waters, wetlands, lakes and other surface water features
- Drainage basin delineations showing the location of each drainage sub-basin
- Proposed stormwater conveyances and structural control facilities
- Direction of flow and discharge points from the site including sheet flow areas
- Paths utilized for the computation of Times of Concentration
- Location and boundaries of proposed natural feature protection areas
- Land use areas delineated with acreage and run-off coefficient/curve number

The map should provide a clear understanding for the various drainage patterns located throughout the site as well as drainage onto the site from upstream areas. Additionally, the map should provide a clear view of the natural features of the site that will be impacted development as well as features that will not be impacted.

6.4.3. Proposed Conditions Tables

A set of tables should be included in the report that will allow the reader to understand how various parameters utilized in modeling the propose conditions were developed. Additionally, tables should be included documenting the results of the modeling.

- A table listing the land cover characteristics, hydrologic soil group, curve number, and acreage for each sub-basin

Example Table for Proposed Conditions Sub-basin 1

Land Cover	Hydrologic Soil Group	Curve Number	Area (acre)
Woods	B	55	1.25
Impervious Surface	B	98	6.48
Open Space	B	61	2.30

- A table listing the total acreage, composite curve number and time of concentration for each sub-basin

Example Table for Proposed Conditions Sub-basin Summary

Sub-Basin	Area (acre)	Curve Number	Tc (minutes)
Sub-Basin 1	10.03	84	7.5
Sub-Basin 2	2.25	71	5.0
Sub-Basin 3	3.98	89	5.0

- A table listing the peak runoff rates for each discharge point from the property or site along with the allowable discharge rate from the Existing Conditions Analysis

Example Table for Proposed Conditions Peak Runoff Rates Summary (cubic feet per second)

Storm	Point 5			Point B		
	Existing	Proposed	Difference	Existing	Proposed	Difference
2-Yr	12.3	12.2	(0.1)	…		
5-Yr	15.6	15.6	0.0			
10-Yr	18.9	17.8	(1.1)			
25-Yr	22.1	20.6	(1.5)			
50-Yr	24.2	23.1	(1.1)			
100-Yr	26.5	26.4	(0.1)			

- A table listing the peak runoff rates and maximum water surface elevations for all detention facilities studied as part of the Existing Conditions Analysis

Example Table for Pond Summary

Sub-Basin	2-Yr	5-Yr	10-Yr	25-Yr	50-Yr	100-Yr
Detention Pond 2	18.2	25.3	32.8	40.1	46.5	50.3
Discharge / Peak Elev	898.12	899.35	901.56	902.65	903.12	903.55

6.4.4. Proposed Conditions Model Diagram

A diagram of the hydrologic model should be provided with the report showing how the model was developed and each node is connected.

6.5. Downstream Analysis

The downstream analysis should provide the reader with a comprehensive picture of the downstream areas and their capacity to accommodate stormwater runoff from the proposed development.

6.5.1. Downstream Analysis Maps

- Drainage basin delineations showing the point at which the contributing area of the project represents the total drainage basin area required to be studied in the analysis
- Identify culverts, channels and other structural stormwater controls that the stormwater runoff must pass through prior to the downstream analysis point identified previously

6.5.2. Downstream Analysis Narratives

A written description of the downstream conditions should be provided including any special considerations that should be noted. If the downstream conditions does not incorporate the 10% rule as defined in the GSMM due to allowances made in this LDM, this should be pointed out in the narrative.

Additionally, the narrative should describe the methodologies, assumptions and other pertinent discussions of how the proposed conditions were analyzed by the designer.

6.5.3. Downstream Tables

A set of tables should be included in the report that will allow the reader to understand how various parameters utilized in modeling the propose conditions were developed. Additionally, tables should be included documenting the results of the modeling. For examples of the tables please see the examples given in the section above for proposed conditions tables.

6.5.4. Model Diagram

A diagram of the hydrologic model should be provided with the report showing how the model was developed and each node is connected.

6.6. Stormwater Management System Design

6.6.1. Stormwater Management System Map

The stormwater management system map should document the various structural components of how stormwater runoff will be moved around the site.

- Location of all non-structural stormwater controls
- Location of all existing stormwater controls to remain after development
- Location of all proposed stormwater controls
- Location of all proposed impoundment type controls (i.e. detention ponds, stormwater ponds, stormwater wetlands, etc.) along with any applicable associated easements
- Location of all conveyance structures and any applicable associated easements
- All impoundment type controls should be labeled with the following information:
    - Maximum water surface elevation
    - Depth and storage volumes for the design storm
    - Depth and storage volumes maximum water surface if the design storm event is exceeded (i.e. Top of dam)
- All inlets to conveyance structures should be labeled with the following information:
    - Maximum design water surface elevation
    - Maximum potential water surface elevation before bypass occurs

- All pipes should be labeled with:
  - Length
  - Material
  - Slope
- All pipes should be profiled and labeled with
  - Length
  - Material
  - Slope
  - Hydraulic grade line for appropriate design storm
- Map showing all contributing drainage areas/sub-basin delineations

6.6.2. Narratives / Calculations

- Narrative describing that appropriate and effective structural stormwater controls have been selected
- Design calculations and elevations for all existing and proposed stormwater conveyance elements including stormwater drains, pipes, culverts, catch basins, channels, swales and areas of overland flow
- Design calculations checking buoyancy for all stormwater outlet control structures associated with stormwater / detention ponds
- Water Balance calculations (if applicable) for all stormwater wet ponds
- Design calculations for sizing of channel protection outlets if applicable
- Design calculations and elevations for all structural water quality BMPs to be utilized for water quality improvement
- Design calculations showing that design meets the requirements of the water quality improvements. The City encourages the designer to utilize the site design tool provided by the North Georgia Water Planning District to meet this requirement. The tool can be acquired from the following website: http://www.northgeorgia water.com/.

6.7. Planting Plan (if applicable)

If the design of the stormwater management system includes best management practices that utilize vegetation as part of the treatment process, please include a copy of the planting plan outlining the types, numbers, and locations of the various plantings required by the design.

6.8. Operations & Maintenance Plan

A narrative of what maintenance tasks will be required for the stormwater controls specified for the site as well as the responsible parties. Additionally, the report will need to identify access and safety issues for the site. The designer is directed to specific maintenance requirements for best management practices outlined in Section 4 of the GSMM (Volume 2) and Volume 3 of the GSMM.

Part II – Transportation

Reserved.

Appendices

Appendix A – Stormwater Hydrologic & Hydraulic Checklist

Appendix B – American Concrete Pipe Association LRFD Fill Height Tables

Appendix C – General Peachtree City Technical Specifications for Drainage Systems

Appendix D – Construction Details

CITY OF PEACHTREE CITY

LOCAL DESIGN MANUAL | 2016 EDITION

Appendix A – Stormwater Hydrologic & Hydraulic Checklist

October 2016

PEACHTREE CITY

CITY OF PEACHTREE CITY

LOCAL DESIGN MANUAL | 2016 EDITION

Appendix B – American Concrete Pipe Association LRFD Fill Height Tables

October 2016

PEACHTREE CITY

CITY OF PEACHTREE CITY

LOCAL DESIGN MANUAL | 2016 EDITION

Appendix C – General Peachtree City Technical Specifications for Drainage Systems

October 2016

PEACHTREE CITY

CITY OF PEACHTREE CITY

LOCAL DESIGN MANUAL | 2016 EDITION

Appendix D – Construction Details

October 2016

PEACHTREE CITY

Appendices

Appendix A – Stormwater Hydrologic & Hydraulic Checklist

Appendix B – American Concrete Pipe Association LRFD Fill Height Tables

Appendix C – General Peachtree City Technical Specifications for Drainage Systems

Appendix D – Construction Details

CITY OF PEACHTREE CITY

LOCAL DESIGN MANUAL | 2016 EDITION

Appendix A – Stormwater Hydrologic & Hydraulic Checklist

October 2016

PEACHTREE CITY

Stormwater Hydrologic & Hydraulic Report Checklist

General Contact Information

Provided	Not Provided	N/A	Description
			Name of Development
			Address of Site
			Name of Developer / Owner
			Contact Information for Developer
			Name of Engineer
			Contact Information for Engineer
			Engineer's Seal, Signature, and Date

Notes: _____

_____

_____

(attach additional pages and note as needed)

Project Narrative

The report should include a brief narrative outlining the project goals and location, as well as a location map such that the project location can be identified by City staff or other readers of the report.

Provided	Not Provided	N/A	Location within Hydrologic & Hydraulic Report

Notes: _____

_____

_____

(attach additional pages and note as needed)

Existing Conditions Hydrologic Analysis

The existing conditions hydrologic analysis should provide the reader with a comprehensive evaluation of the site conditions prior to development of the project. The designer should provide the following information with this element of the report:

General Existing Conditions Information

Yes	No	Description
		Are any perennial or intermittent streams located on the property?
		Are any federal, state or local stream buffers located on the Property?
		Are federally regulated wetlands or other waterbodies located on the Property?
		Are any drainage channels, streams, lakes, etc. with a drainage area greater than 100 acres located on the Property?
		Is a regulated floodplain (either FEMA Floodplain or Metropolitan North Georgia Planning District Future Conditions Floodplain) located on the Property?
		Are any existing detention ponds located on the Property?

Notes: _____

_____

_____

(attach additional pages and note as needed)

Existing Conditions Narrative

A written description of the existing conditions found at the site should be provided. Additionally, the narrative should describe the methodologies, assumptions and other pertinent discussions of how the existing conditions were analyzed by the designer.

Provided	Not Provided	N/A	Location within Hydrologic & Hydraulic Report

Notes: _____

_____

_____

(attach additional pages and note as needed)

Existing Conditions Map(s)

An existing conditions map should be provided with the report including but not limited to following:

- Topography (2-ft. or less contour interval) of existing site conditions
- Perennial / intermittent streams, wetlands, lakes and other surface water features
- Drainage basin delineations showing the location of each drainage sub-basin
- Drainage basin delineations for each contributing drainage basin upstream of the project site on an appropriate map (USGS Quadrangle, etc.)
- Existing stormwater conveyances and structural control facilities
- Direction of flow and discharge points from the site including sheet flow areas
- Any area of significant depression storage
- Federal, state and local buffers

The map should provide a clear understanding of the various drainage patterns located throughout the site as well as drainage onto the site from upstream areas. Additionally, the map should provide a clear view of the natural features of the site that may impact development.

Provided	Not Provided	N/A	Location within Hydrologic & Hydraulic Report

Notes: _____

_____

_____

(attach additional pages and note as needed)

Existing Conditions Tables

A set of tables should be included in the report that will allow the reader to understand how various parameters utilized in modeling the existing conditions were developed. Additionally, tables should be included documenting the results of the modeling.

- A table listing the land cover characteristics, hydrologic soil group, curve number, and acreage for each sub-basin

Provided	Not Provided	N/A	Location within Hydrologic & Hydraulic Report

- A table listing the total acreage, composite curve number and time of concentration for each sub-basin

Provided	Not Provided	N/A	Location within Hydrologic & Hydraulic Report

- A table listing the peak runoff rates for each discharge point from the property or site

Provided	Not Provided	N/A	Location within Hydrologic & Hydraulic Report

- A table listing the peak runoff rates and maximum water surface elevations for all detention facilities studied as part of the existing conditions analysis

Provided	Not Provided	N/A	Location within Hydrologic & Hydraulic Report

Notes: _____

_____

_____
(attach additional pages and note as needed)

Existing Conditions Model Diagram

A diagram of the hydrologic model should be provided with the report showing how the model was developed and each node is connected.

Provided	Not Provided	N/A	Location within Hydrologic & Hydraulic Report

Notes: _____

_____

_____
(attach additional pages and note as needed)

Post-Development Hydrologic Analysis

The proposed conditions hydrologic analysis should provide the reader with a comprehensive evaluation of the site conditions following the development of the project. The designer should provide the following information with this element of the report:

General Post-Development Conditions Information

Yes	No	Description
		Will any existing streams, lakes or wetlands be disturbed by this project?
		Will any existing detention ponds or other drainage features of the property be modified?
		Will a state or local stream buffer be required for this project?
		Will any federal permits related to water resources (i.e. streams, lakes, wetlands, etc.) be required for this project?
		Will any development occur within a FEMA or locally regulated floodplains occur as a result of this project?
		Will any drainage basin discharging from the property be changed by the lesser of 10% of the total drainage area or 1 acre?

Notes: _____

_____

_____

(attach additional pages and note as needed)

Proposed Conditions Narrative

A written description of the proposed conditions to be found at the site after construction should be provided. Additionally, the narrative should describe the methodologies, assumptions and other pertinent discussions of how the proposed conditions were analyzed by the designer.

Provided	Not Provided	N/A	Location within Hydrologic & Hydraulic Report

Notes: _____

_____

_____

(attach additional pages and note as needed)

Proposed Conditions Map

A proposed conditions map should be provided with the report including but not limited to following:

- Topography (2-ft. or less contour interval) of proposed site conditions
- Perennial/intermittent streams, wetlands, lakes and other surface water features
- Drainage basin delineations showing the location of each drainage sub-basin
- Proposed stormwater conveyances and structural control facilities
- Direction of flow and discharge points from the site including sheet flow areas
- Location and boundaries of proposed natural feature protection areas

The map should provide a clear understanding for the various drainage patterns located throughout the site as well as drainage onto the site from upstream areas. Additionally, the map should provide a clear view of the natural features of the site that will be impacted development as well as features that will not be impacted.

Provided	Not Provided	N/A	Location within Hydrologic & Hydraulic Report

Notes: _____

_____

_____

(attach additional pages and note as needed)

Proposed Conditions Tables

A set of tables should be included in the report that will allow the reader to understand how various parameters utilized in modeling the propose conditions were developed. Additionally, tables should be included documenting the results of the modeling.

- A table listing the land cover characteristics, hydrologic soil group, curve number, and acreage for each sub-basin

Provided	Not Provided	N/A	Location within Hydrologic & Hydraulic Report

Notes: _____

_____

_____

(attach additional pages and note as needed)

- A table listing the total acreage, composite curve number and time of concentration for each sub-basin

Provided	Not Provided	N/A	Location within Hydrologic & Hydraulic Report

Notes: _____

_____

_____
(attach additional pages and note as needed)

- A table listing the peak runoff rates for each discharge point from the property or site along with the allowable discharge rate from the Existing Conditions Analysis

Provided	Not Provided	N/A	Location within Hydrologic & Hydraulic Report

Notes: _____

_____

_____
(attach additional pages and note as needed)

- A table listing the peak runoff rates and maximum water surface elevations for all detention facilities studied as part of the existing conditions analysis

Provided	Not Provided	N/A	Location within Hydrologic & Hydraulic Report

Notes: _____

_____

_____
(attach additional pages and note as needed)

Proposed Conditions Model Diagram

A diagram of the hydrologic model should be provided with the report showing how the model was developed and each node is connected.

Provided	Not Provided	N/A	Location within Hydrologic & Hydraulic Report

Notes: _____

_____

_____

(attach additional pages and note as needed)

Downstream Analysis

The downstream analysis should provide the reader with a comprehensive picture of the downstream areas and their capacity to accommodate stormwater runoff from the proposed development.

General Post-Development Conditions Information

Yes	No	Description
		Did the downstream analysis incorporate the 10% rule? If not, please explain briefly in the notes below.
		Were there any detention ponds, ponds, or lakes within the limits of your downstream analysis study area?

Notes: _____

_____

_____

(attach additional pages and note as needed)

Downstream Analysis Narratives

A written description of the downstream conditions should be provided including any special considerations that should be noted. If the downstream conditions does not incorporate the 10% rule as defined in the GSMM due to allowances made in this LDM, this should be pointed out in the narrative. Additionally, the narrative should describe the methodologies, assumptions and other pertinent discussions of how the proposed conditions were analyzed by the designer.

Provided	Not Provided	N/A	Location within Hydrologic & Hydraulic Report

Notes: _____

_____

_____

(attach additional pages and note as needed)

Downstream Analysis Maps

- Drainage basin delineations showing the point at which the contributing area of the project represents the total drainage basin area required to be studied in the analysis

Provided	Not Provided	N/A	Location within Hydrologic & Hydraulic Report

Notes: _____

_____

_____

(attach additional pages and note as needed)

- Identify culverts, channels and other structural stormwater controls that the stormwater runoff must pass through prior to the downstream analysis point identified previously

Provided	Not Provided	N/A	Location within Hydrologic & Hydraulic Report

Notes: _____

_____

_____

(attach additional pages and note as needed)

Downstream Tables

A set of tables should be included in the report that will allow the reader to understand how various parameters utilized in modeling the propose conditions were developed. Additionally, tables should be included documenting the results of the modeling. For examples of the tables please see the examples given in the section above for proposed conditions tables.

- A table listing the land cover characteristics, hydrologic soil group, curve number, and acreage for each sub-basin

Provided	Not Provided	N/A	Location within Hydrologic & Hydraulic Report

Notes: _____

_____

_____
(attach additional pages and note as needed)

- A table listing the total acreage, composite curve number and time of concentration for each sub-basin

Provided	Not Provided	N/A	Location within Hydrologic & Hydraulic Report

Notes: _____

_____

_____
(attach additional pages and note as needed)

- A table listing the peak runoff rates for each analysis point in the downstream analysis demonstrating the discharge rates for the existing conditions along with the discharge rates for the post-development conditions.

Provided	Not Provided	N/A	Location within Hydrologic & Hydraulic Report

Notes: _____

_____

_____
(attach additional pages and note as needed)

- A table listing the peak runoff rates and maximum water surface elevations for all detention ponds or lakes studied as part of the downstream analysis. If a detention pond, pond, or lake was not studied, then mark N/A and note why the pond or lake was not studied or note that no ponds or lakes existed in the downstream reach.

Provided	Not Provided	N/A	Location within Hydrologic & Hydraulic Report

Notes: _____

_____

_____

(attach additional pages and note as needed)

Model Diagram

A diagram of the hydrologic model should be provided with the report showing how the model was developed and each node is connected.

Provided	Not Provided	N/A	Location within Hydrologic & Hydraulic Report

Notes: _____

_____

_____

(attach additional pages and note as needed)

Stormwater Management System Design

Stormwater Management System Map

The stormwater management system map should document the various structural components of how stormwater runoff will be moved around the site.

General Contact Information

Provided	Not Provided	N/A	Description
			Location of all non-structural stormwater controls
			Location of all existing stormwater controls to remain after development
			Location of all proposed stormwater controls
			Location of all proposed impoundment type controls (i.e. detention ponds, stormwater ponds, stormwater wetlands, etc.) along with any applicable associated easements
			Location of all conveyance structures and any applicable associated easements

Notes: _____

_____

_____

(attach additional pages and note as needed)

- All impoundment type controls should be labeled with the following information:
  - Maximum water surface elevation
  - Depth and storage volumes for the design storm
  - Depth and storage volumes maximum water surface if the design storm event is exceeded (i.e. Top of dam)

Provided	Not Provided	N/A	Location within Hydrologic & Hydraulic Report

Notes: _____

_____

_____

(attach additional pages and note as needed)

- All inlets to conveyance structures should be labeled with the following information:
  - Maximum design water surface elevation
  - Maximum potential water surface elevation before bypass occurs

Provided	Not Provided	N/A	Location within Hydrologic & Hydraulic Report

Notes: _____

_____

_____
(attach additional pages and note as needed)

- Plan view map illustrating all pipes labeled with:
  - Upstream & Downstream Structure ID
  - Length
  - Material
  - Slope

Provided	Not Provided	N/A	Location within Hydrologic & Hydraulic Report

Notes: _____

_____

_____
(attach additional pages and note as needed)

- Profiles of all pipes labeled with:
  - Upstream & Downstream Structure ID
  - Length
  - Material
  - Slope
  - Hydraulic grade line for appropriate design storm

Provided	Not Provided	N/A	Location within Hydrologic & Hydraulic Report

Notes: _____

_____

_____
(attach additional pages and note as needed)

- Map showing all contributing drainage areas/sub-basin delineations for each detention pond / BMP

Provided	Not Provided	N/A	Location within Hydrologic & Hydraulic Report

Notes: _____

_____

_____
(attach additional pages and note as needed)

- Map showing all contributing drainage areas/sub-basin delineations for each Inlet including:
  - Inlet ID
  - Drainage Area
  - Time of Concentration
  - c-Factor / Curve Number

Provided	Not Provided	N/A	Location within Hydrologic & Hydraulic Report

Notes: _____

_____

_____
(attach additional pages and note as needed)

Narratives / Calculations

The narratives and calculations section should outline and describe the means by which the design will meet the various requirements for design of a stormwater management in Peachtree City.

- Narrative describing that appropriate and effective structural stormwater controls have been selected

Provided	Not Provided	N/A	Location within Hydrologic & Hydraulic Report

Notes: _____

_____

_____

(attach additional pages and note as needed)

- Design calculations and elevations for all existing and proposed stormwater conveyance elements including stormwater drains, pipes, culverts, catch basins, channels, swales and areas of overland flow

Provided	Not Provided	N/A	Location within Hydrologic & Hydraulic Report

Notes: _____

_____

_____

(attach additional pages and note as needed)

- Design calculations checking buoyancy for all stormwater outlet control structures associated with stormwater / detention ponds

Provided	Not Provided	N/A	Location within Hydrologic & Hydraulic Report

Notes: _____

_____

_____

(attach additional pages and note as needed)

- Water Balance calculations (if applicable) for all stormwater wet ponds

Provided	Not Provided	N/A	Location within Hydrologic & Hydraulic Report

Notes: _____

_____

_____

(attach additional pages and note as needed)

- Design calculations for sizing of channel protection outlets if applicable

Provided	Not Provided	N/A	Location within Hydrologic & Hydraulic Report

Notes: _____

_____

_____
(attach additional pages and note as needed)

- Design calculations and elevations for all structural water quality BMPs to be utilized for water quality improvement

Provided	Not Provided	N/A	Location within Hydrologic & Hydraulic Report

Notes: _____

_____

_____
(attach additional pages and note as needed)

- Design calculations showing that design meets the requirements of the water quality improvements. The City encourages the designer to utilize the site design tool provided by the North Georgia Water Planning District to meet this requirement. The tool can be acquired from the following website: http://www.northgeorgia water.com/.

Provided	Not Provided	N/A	Location within Hydrologic & Hydraulic Report

Notes: _____

_____

_____
(attach additional pages and note as needed)

Planting Plan (if applicable)

If the design of the stormwater management system includes best management practices that utilize vegetation as part of the treatment process, please include a copy of the planting plan outlining the types, numbers, and locations of the various plantings required by the design.

Provided	Not Provided	N/A	Location within Hydrologic & Hydraulic Report

Notes: _____

_____

_____

(attach additional pages and note as needed)

Operations & Maintenance Plan

A narrative of what maintenance tasks will be required for the stormwater controls specified for the site as well as the responsible parties. Additionally, the report will need to identify access and safety issues for the site. The designer is directed to specific maintenance requirements for best management practices outlined in Section 4 of the GSMM (Volume 2) and Volume 3 of the GSMM.

Provided	Not Provided	N/A	Location within Hydrologic & Hydraulic Report

Notes: _____

_____

_____

(attach additional pages and note as needed)

Certification

_____
Project Name

_____
Project Location (Tax Parcel and Land Lot and District)

_____
Project Address

I hereby certify that the grading and drainage plans for the project above referenced project have been prepared under my supervision, and state that in my opinion, the construction of said project will not produce storm drainage conditions that will cause damage or adversely affect the surrounding properties for the storm events specified in the City of Peachtree City Land Development Regulations.

_____
Signature

_____
Printed Name

_____
Georgia Professional Engineering Registration Number

_____
Date

Seal

CITY OF PEACHTREE CITY

LOCAL DESIGN MANUAL | 2016 EDITION

Appendix B – American Concrete Pipe Association LRFD Fill Height Tables

October 2016

PEACHTREE CITY

LRFD FILL HEIGHT TABLES

FOR CONCRETE PIPE

American
Concrete Pipe
Association

Standard Trench/Embankment Installation

Concrete pipe should be installed in accordance with the AASHTO LRFD Bridge Construction Specifications, Section 27 or ASTM C1479. Figure 1 shows the basic pipe and soil terminology.

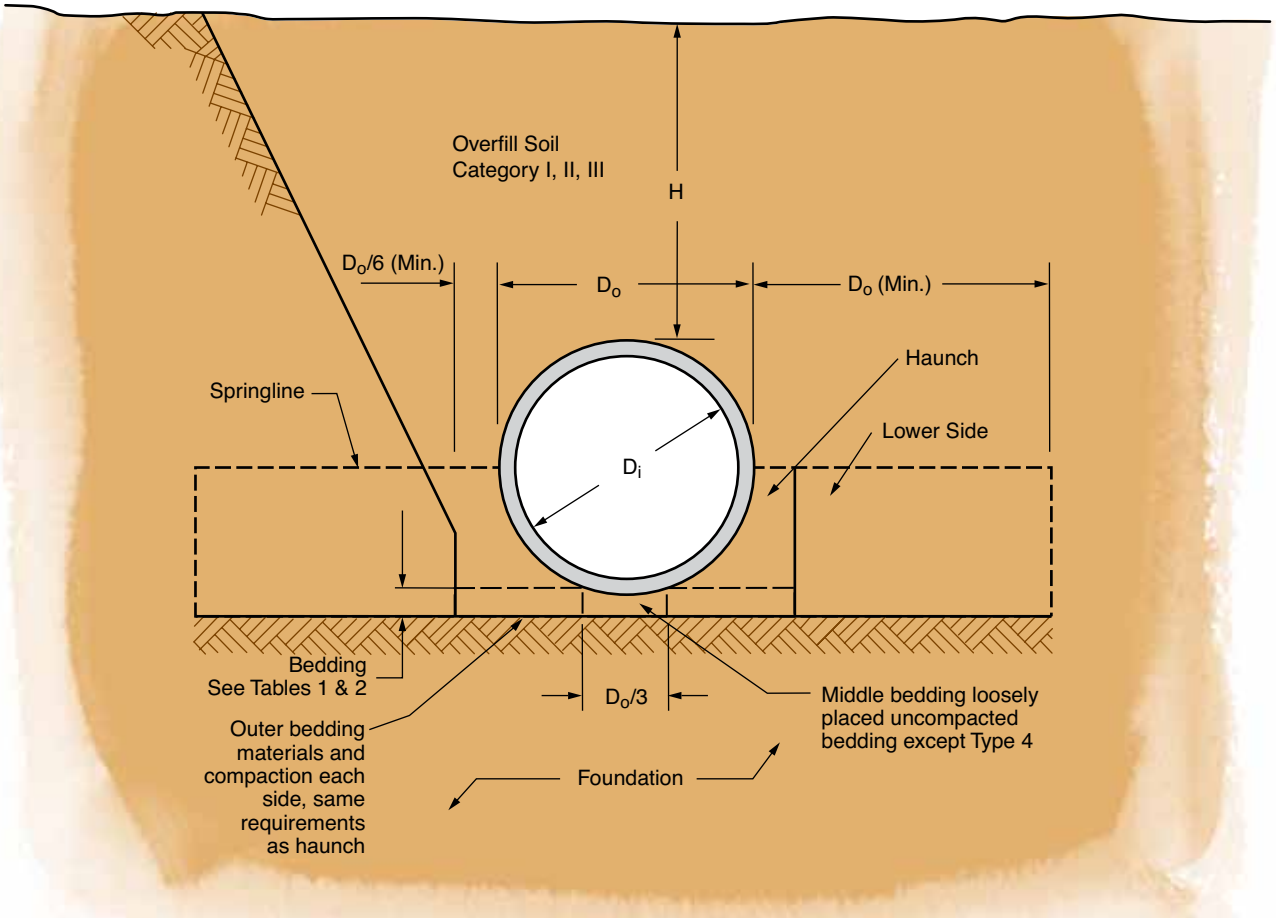

There are four types of Standard Installations, each with its own soil and compaction requirements. Type 1 bedding provides the most support using highly compacted granular material, while Type 4 provides for less support allowing the use of silts and clay soils with little or no compaction. These four choices provide flexibility and versatility for the designer and contractor, as well as performance and economy for the owner that are not available with other types of pipe.

The soil and compaction requirements are provided in Table 1. Table 2 shows the equivalent soil designations per the Unified Soil Classification System (USCS) and AASHTO.

To facilitate your selection of the proper reinforced concrete pipe using the most beneficial Standard Installation for the conditions at the site, fill height tables are provided on the following pages. The required 0.01 inch crack D-Loads in units of lbs per linear foot per foot of diameter are provided numerically and the class of pipe per ASTM C76 (AASHTO M 170) meeting this requirement is designated by color of the cell.

© 2013 American Concrete Pipe Association, all rights reserved.

Table 1: Standard Installation Soils and Minimum Compaction Requirements

Installation Type	Bedding Thickness	Haunch and Outer Bedding	Lower Side
Type 1	D_0/24 minimum, not less than 3" (75 mm) If rock foundation, use D_0/12 minimum, not less than 6" (150 mm)	95% Category I	90% Category I, 95% Category II, or 100% Category III
Type 2	D_0/24 minimum, not less than 3" (75 mm) If rock foundation, use D_0/12 minimum, not less than 6" (150 mm)	90% Category I or 95% Category II	85% Category I, 90% Category II, or 95% Category III
Type 3	D_0/24 minimum, not less than 3" (75 mm) If rock foundation, use D_0/12 minimum, not less than 6" (150 mm)	85% Category I, 90% Category II, or 95% Category III	85% Category I, 90% Category II, or 95% Category III
Type 4	No bedding required except if rock foundation, use D_0/12 minimum, not less than 6" (150 mm)	No compaction required, except if Category III, use 85%	No compaction required, except if Category III, use 85%

Reference: ASCE 15-98, "Standard Practice for Direct Design of Buried Precast Concrete Pipe Using Standard Installations (SIDD)", 1998.

Table 2: Equivalent USCS and AASHTO Soil Classifications for Standard Installation Soil Designations

Representative Soil Types			Percent Compaction	
SIDD	USCS	AASHTO	Standard Proctor	Modified Proctor
Gravelly Sand (Category I)	SW, SP, GW, GP	A1, A3	100 95 90 85 80 61	95 90 85 80 75 59
Sandy Silt (Category II)	GM, SM, ML, Also GC, SC with less than 20% passing #200 sieve	A2, A4	100 95 90 85 80 49	95 90 85 80 75 46
Silty Clay (Category III)	CL, MH, GC, SC	A5, A6	100 95 90 85 80 45	90 85 80 75 70 40
Not Allowed for Haunch or Bedding	CH	A7	100 95 90 45	90 85 80 40

Reference: ASCE 15-98, "Standard Practice for Direct Design of Buried Precast Concrete Pipe Using Standard Installations (SIDD)", 1998.

Table 3: Reinforced Pipe Classes for 0.01 inch Crack Per ASTM C 76 (lbs/ft/ft)

Class I	≤ 800
Class II	≤ 1000
Class III	≤ 1350
Class IV	≤ 2000
Class V	≤ 3000
Special Design	> 3000

NOTES:
1. Compaction and soil symbols – i.e. "95% Category I" refers to Category I soil material with a minimum Standard Proctor compaction of 95%. See Table 2 for equivalent Modified Proctor values.
2. Soil in the outer bedding, haunch, and lower side zones shall be compacted to at least the same compaction as the majority of soil in the overfill zone.

© 2013 American Concrete Pipe Association, all rights reserved.

The following Fill Height Tables have been developed by the American Concrete Pipe Association (ACPA) using the indirect design method in accordance with Section 12.10.4.3 of the AASHTO LRFD Bridge Design Specification, 6th Edition, 2012 with 2013 Interim.

Fill Height Tables are based on:

1. γs = 120 pcf
2. AASHTO HL-93 live load
3. Positive Projecting Embankment Condition - this gives conservative results in comparison to trench conditions
4. A Type 1 installation requires greater soil stiffness from the surrounding soils than the Type 2, 3, and 4 installations, and is thus harder to achieve. Therefore, field verification of soil properties and compaction levels should be performed.

D-Load (lb/ft/ft) for Type 1 Bedding

Class I
Class II
Class III
Class IV
Class V
Special Design

	Fill Height in Feet													
Pipe Size (in)	1	2	3	4	5	6	7	8	9	10	11	12	13	14
12	1612	1399	888	695	633	620	635	661	544	603	662	721	780	839
15	1546	1344	856	673	614	602	617	644	532	589	646	704	761	818
18	1462	1307	836	660	604	593	608	634	526	583	639	696	752	809
21	1309	1281	823	653	598	588	604	630	525	581	637	693	749	805
24	1287	1262	814	648	595	587	603	629	527	583	638	694	750	805
27	1230	1217	789	636	587	582	600	627	530	586	642	697	753	809
30	1581	1272	819	660	605	598	615	640	535	591	646	702	758	814
33	1443	1222	798	651	599	596	615	641	541	597	653	709	765	821
36	1329	1187	780	643	595	595	616	643	547	603	660	716	772	829
42	1151	1099	745	627	587	591	613	641	553	609	665	721	778	834
48	1019	961	713	614	582	589	612	641	560	616	673	729	785	841
54	969	919	689	604	578	589	613	643	569	625	681	737	794	850
60	994	890	670	596	577	590	615	646	578	634	691	747	804	860
66	946	865	657	589	576	592	618	651	588	644	701	758	814	871
72	881	844	647	584	578	595	622	656	598	655	712	769	826	883
78	827	823	637	582	579	597	625	659	606	663	720	777	834	892
84	782	805	629	580	580	600	628	664	615	672	729	786	843	901
90	744	789	622	580	582	603	632	668	712	681	738	795	853	910
96	712	749	616	580	585	606	637	673	718	690	747	805	862	920
102	685	723	623	587	592	614	645	682	727	774	757	814	872	929
108	662	711	629	595	600	623	654	691	736	783	766	824	882	940
114	642	715	636	603	609	631	663	700	745	793	842	834	892	950
120	625	720	642	609	617	640	672	709	755	802	852	844	903	961
126	611	726	649	617	625	649	681	719	764	812	862	913	913	971
132	599	731	651	625	634	658	690	728	774	822	872	924	976	983
138	589	736	645	633	643	667	699	738	784	832	883	934	987	994
144	580	742	651	642	652	676	709	747	794	843	893	945	998	1052

© 2013 American Concrete Pipe Association, all rights reserved.

Fill Height Tables are based on:

1. γs = 120 pcf
2. AASHTO HL-93 live load
3. Positive Projecting Embankment Condition - this gives conservative results in comparison to trench conditions
4. A Type 1 installation requires greater soil stiffness from the surrounding soils than the Type 2, 3, and 4 installations, and is thus harder to achieve. Therefore, field verification of soil properties and compaction levels should be performed.

D-Load (lb/ft/ft) for Type 1 Bedding

Class I
Class II
Class III
Class IV
Class V
Special Design

	Fill Height in Feet													
Pipe Size (in)	15	16	17	18	19	20	21	22	23	24	25	26	27	28
12	898	957	1016	1075	1134	1194	1253	1312	1371	1430	1489	1548	1607	1666
15	876	933	990	1048	1105	1163	1220	1277	1335	1392	1449	1507	1564	1621
18	865	921	978	1034	1091	1147	1203	1260	1316	1373	1429	1485	1542	1598
21	861	917	973	1029	1084	1140	1196	1252	1308	1364	1420	1476	1532	1588
24	861	917	972	1028	1084	1139	1195	1251	1306	1362	1418	1474	1529	1585
27	864	920	975	1031	1087	1142	1198	1254	1309	1365	1421	1476	1532	1588
30	870	925	981	1037	1093	1148	1204	1260	1316	1372	1427	1483	1539	1595
33	877	933	989	1045	1101	1157	1213	1269	1325	1381	1437	1493	1549	1605
36	885	941	998	1054	1110	1167	1223	1279	1335	1392	1448	1504	1561	1617
42	890	946	1002	1058	1115	1171	1227	1283	1339	1395	1451	1508	1564	1620
48	897	953	1010	1066	1122	1178	1234	1290	1346	1403	1459	1515	1571	1627
54	906	963	1019	1075	1131	1188	1244	1300	1356	1413	1469	1525	1581	1638
60	917	973	1029	1086	1142	1199	1255	1312	1368	1425	1481	1538	1594	1650
66	928	985	1041	1098	1155	1211	1268	1325	1381	1438	1495	1552	1608	1665
72	940	997	1054	1111	1168	1225	1282	1339	1396	1453	1510	1567	1624	1681
78	949	1006	1063	1120	1177	1234	1291	1348	1405	1462	1519	1576	1633	1690
84	958	1015	1072	1129	1186	1244	1301	1358	1415	1472	1529	1587	1644	1701
90	967	1024	1082	1139	1196	1254	1311	1368	1425	1483	1540	1597	1655	1712
96	977	1034	1092	1149	1207	1264	1322	1379	1436	1494	1551	1609	1666	1723
102	987	1045	1102	1160	1217	1275	1333	1390	1448	1505	1563	1620	1678	1736
108	997	1055	1113	1171	1228	1286	1344	1402	1459	1517	1575	1633	1690	1748
114	1008	1066	1124	1182	1240	1298	1356	1413	1471	1529	1587	1645	1703	1761
120	1019	1077	1135	1193	1251	1309	1367	1426	1484	1542	1600	1658	1716	1774
126	1030	1088	1146	1205	1263	1321	1380	1438	1496	1555	1613	1671	1730	1788
132	1041	1100	1158	1217	1275	1334	1392	1451	1509	1568	1626	1685	1743	1802
138	1052	1111	1170	1229	1287	1346	1405	1464	1522	1581	1640	1698	1757	1816
144	1064	1123	1182	1241	1300	1359	1418	1477	1536	1595	1654	1712	1771	1830

© 2013 American Concrete Pipe Association, all rights reserved.

Fill Height Tables are based on:
1. γs = 120 pcf
2. AASHTO HL-93 live load
3. Positive Projecting Embankment Condition - this gives conservative results in comparison to trench conditions
4. A Type 1 installation requires greater soil stiffness from the surrounding soils than the Type 2, 3, and 4 installations, and is thus harder to achieve. Therefore, field verification of soil properties and compaction levels should be performed.

D-Load (lb/ft/ft) for Type 1 Bedding

Class I
Class II
Class III
Class IV
Class V
Special Design

	Fill Height in Feet													
Pipe Size (in)	29	30	31	32	33	34	35	36	37	38	39	40	41	42
12	1725	1784	1843	1902	1961	2020	2079	2139	2198	2257	2316	2375	2434	2493
15	1679	1736	1793	1851	1908	1965	2023	2080	2138	2195	2252	2310	2367	2424
18	1655	1711	1767	1824	1880	1937	1993	2049	2106	2162	2219	2275	2331	2388
21	1643	1699	1755	1811	1867	1923	1979	2035	2091	2147	2203	2258	2314	2370
24	1641	1696	1752	1808	1863	1919	1975	2030	2086	2142	2197	2253	2309	2365
27	1643	1699	1755	1810	1866	1922	1977	2033	2089	2144	2200	2256	2311	2367
30	1650	1706	1762	1818	1874	1929	1985	2041	2097	2152	2208	2264	2320	2376
33	1661	1717	1773	1829	1885	1941	1997	2053	2109	2165	2221	2277	2333	2389
36	1673	1730	1786	1842	1899	1955	2011	2067	2124	2180	2236	2293	2349	2405
42	1676	1732	1788	1845	1901	1957	2013	2069	2125	2181	2238	2294	2350	2406
48	1683	1740	1796	1852	1908	1964	2020	2077	2133	2189	2245	2301	2357	2414
54	1694	1750	1807	1863	1919	1975	2032	2088	2144	2200	2257	2313	2369	2426
60	1707	1763	1820	1876	1933	1989	2046	2102	2159	2215	2271	2328	2384	2441
66	1722	1778	1835	1892	1948	2005	2062	2119	2175	2232	2289	2345	2402	2459
72	1738	1795	1852	1909	1966	2023	2080	2137	2194	2251	2308	2365	2422	2479
78	1748	1805	1862	1919	1976	2033	2090	2147	2204	2261	2318	2375	2432	2489
84	1758	1815	1872	1929	1987	2044	2101	2158	2215	2272	2330	2387	2444	2501
90	1769	1826	1884	1941	1998	2056	2113	2170	2227	2285	2342	2399	2457	2514
96	1781	1838	1896	1953	2011	2068	2125	2183	2240	2298	2355	2413	2470	2527
102	1793	1851	1908	1966	2024	2081	2139	2196	2254	2311	2369	2427	2484	2542
108	1806	1864	1921	1979	2037	2095	2152	2210	2268	2326	2383	2441	2499	2557
114	1819	1877	1935	1993	2051	2109	2167	2224	2282	2340	2398	2456	2514	2572
120	1832	1891	1949	2007	2065	2123	2181	2239	2297	2355	2414	2472	2530	2588
126	1846	1905	1963	2021	2079	2138	2196	2254	2313	2371	2429	2488	2546	2604
132	1860	1919	1977	2036	2094	2153	2211	2270	2328	2387	2446	2504	2563	2621
138	1875	1933	1992	2051	2110	2168	2227	2286	2345	2403	2462	2521	2579	2638
144	1889	1948	2007	2066	2125	2184	2243	2302	2361	2420	2479	2538	2597	2656

© 2013 American Concrete Pipe Association, all rights reserved.

Fill Height Tables are based on:

1. γs = 120 pcf
2. AASHTO HL-93 live load
3. Positive Projecting Embankment Condition - this gives conservative results in comparison to trench conditions
4. A Type 1 installation requires greater soil stiffness from the surrounding soils than the Type 2, 3, and 4 installations, and is thus harder to achieve. Therefore, field verification of soil properties and compaction levels should be performed.

D-Load (lb/ft/ft) for Type 1 Bedding

Class I
Class II
Class III
Class IV
Class V
Special Design

	Fill Height in Feet											
Pipe Size (in)	43	44	45	46	47	48	49	50	51	52	53	54
12	2552	2611	2670	2729	2788	2847	2906	2965	3024	3084	3143	3202
15	2482	2539	2596	2654	2711	2768	2826	2883	2940	2998	3055	3112
18	2444	2501	2557	2614	2670	2726	2783	2839	2896	2952	3008	3065
21	2426	2482	2538	2594	2650	2706	2762	2817	2873	2929	2985	3041
24	2420	2476	2532	2587	2643	2699	2754	2810	2866	2921	2977	3033
27	2423	2478	2534	2590	2645	2701	2757	2812	2868	2924	2979	3035
30	2431	2487	2543	2599	2654	2710	2766	2822	2878	2933	2989	3045
33	2445	2501	2557	2613	2669	2725	2781	2837	2893	2949	3005	3061
36	2462	2518	2574	2631	2687	2743	2799	2856	2912	2968	3025	3081
42	2462	2518	2575	2631	2687	2743	2799	2855	2911	2968	3024	3080
48	2470	2526	2582	2638	2694	2750	2807	2863	2919	2975	3031	3087
54	2482	2538	2594	2651	2707	2763	2819	2876	2932	2988	3044	3101
60	2497	2554	2610	2667	2723	2780	2836	2892	2949	3005	3062	3118
66	2515	2572	2629	2686	2742	2799	2856	2912	2969	3026	3082	3139
72	2536	2593	2650	2707	2764	2821	2878	2935	2992	3049	3106	3163
78	2546	2603	2661	2718	2775	2832	2889	2946	3003	3060	3117	3174
84	2558	2615	2673	2730	2787	2844	2901	2958	3016	3073	3130	3187
90	2571	2628	2686	2743	2800	2858	2915	2972	3030	3087	3144	3201
96	2585	2642	2700	2757	2815	2872	2929	2987	3044	3102	3159	3217
102	2599	2657	2715	2772	2830	2887	2945	3002	3060	3118	3175	3233
108	2614	2672	2730	2788	2845	2903	2961	3019	3076	3134	3192	3250
114	2630	2688	2746	2804	2862	2920	2978	3035	3093	3151	3209	3267
120	2646	2704	2762	2820	2879	2937	2995	3053	3111	3169	3227	3285
126	2663	2721	2779	2838	2896	2954	3013	3071	3129	3187	3246	3304
132	2680	2738	2797	2855	2914	2972	3031	3089	3148	3206	3265	3323
138	2697	2756	2814	2873	2932	2991	3049	3108	3167	3226	3284	3343
144	2715	2774	2833	2892	2950	3009	3068	3127	3186	3245	3304	3363

© 2013 American Concrete Pipe Association, all rights reserved.

Fill Height Tables are based on:
1. γs = 120 pcf
2. AASHTO HL-93 live load
3. Positive Projecting Embankment Condition - this gives conservative results in comparison to trench conditions

D-Load (lb/ft/ft) for Type 2 Bedding

Class I
Class II
Class III
Class IV
Class V
Special Design

Pipe Size (in)	Fill Height in Feet													
	1	2	3	4	5	6	7	8	9	10	11	12	13	14
12	1492	1322	880	727	694	705	741	788	704	781	858	934	1011	1087
15	1434	1272	851	707	676	688	724	771	691	843	841	915	990	1065
18	1358	1240	834	697	668	680	717	763	688	837	835	909	983	1056
21	1220	1218	824	692	665	678	715	762	689	839	836	909	983	1056
24	1202	1203	818	690	665	680	717	764	694	844	841	915	988	1062
27	1151	1162	796	679	657	675	714	762	696	846	842	915	989	1062
30	1471	1213	823	701	674	690	727	773	699	850	845	919	992	1065
33	1347	1168	805	693	669	688	727	773	704	855	850	923	996	1069
36	1244	1137	789	687	665	687	728	775	710	861	856	929	1003	1076
42	1084	1059	759	673	659	685	726	773	715	867	861	933	1006	1079
48	966	935	732	663	655	684	726	774	722	874	867	940	1013	1085
54	923	899	712	655	654	685	728	777	731	884	876	948	1021	1094
60	948	875	696	650	654	688	731	781	740	894	885	958	1031	1103
66	906	855	687	646	655	691	736	787	750	906	896	969	1041	1114
72	850	837	679	643	658	696	741	793	761	918	907	980	1053	1126
78	802	820	672	642	660	697	744	796	768	925	913	986	1059	1131
84	763	805	665	641	661	700	747	799	775	932	920	993	1065	1138
90	730	791	660	641	664	703	750	803	863	940	927	999	1072	1144
96	703	756	655	642	666	706	754	807	867	948	934	1006	1078	1151
102	679	734	662	649	674	714	761	814	875	1019	941	1013	1086	1158
108	660	723	668	657	681	721	769	822	882	1027	949	1021	1093	1165
114	643	729	675	665	689	729	776	830	890	1036	1016	1028	1100	1172
120	629	734	682	670	697	737	784	837	898	1044	1024	1036	1108	1180
126	617	740	689	678	705	744	792	845	905	1053	1032	1097	1115	1187
132	607	745	691	686	712	752	800	853	913	1061	1039	1105	1171	1195
138	599	751	686	694	720	760	808	861	921	1070	1047	1112	1178	1203
144	592	757	692	701	728	768	816	869	929	1079	1055	1120	1186	1253

© 2013 American Concrete Pipe Association, all rights reserved.

Fill Height Tables are based on:
1. γs = 120 pcf
2. AASHTO HL-93 live load
3. Positive Projecting Embankment Condition - this gives conservative results in comparison to trench conditions

D-Load (lb/ft/ft) for Type 2 Bedding

Class I
Class II
Class III
Class IV
Class V
Special Design

Pipe Size (in)	Fill Height in Feet													
	15	16	17	18	19	20	21	22	23	24	25	26	27	28
12	1164	1240	1317	1393	1470	1547	1623	1700	1776	1853	1929	2006	2083	2159
15	1139	1214	1289	1363	1438	1513	1587	1662	1737	1811	1886	1961	2035	2110
18	1130	1204	1278	1351	1425	1499	1573	1647	1720	1794	1868	1942	2015	2089
21	1130	1203	1277	1350	1424	1497	1570	1644	1717	1791	1864	1938	2011	2085
24	1135	1209	1282	1356	1429	1503	1576	1650	1723	1797	1870	1944	2017	2091
27	1135	1208	1282	1355	1428	1501	1574	1648	1721	1794	1867	1940	2014	2087
30	1138	1211	1284	1357	1430	1503	1576	1649	1722	1796	1869	1942	2015	2088
33	1143	1216	1289	1362	1435	1508	1581	1654	1727	1800	1874	1947	2020	2093
36	1149	1222	1295	1369	1442	1515	1588	1662	1735	1808	1881	1954	2028	2101
42	1152	1225	1298	1370	1443	1516	1589	1662	1735	1807	1880	1953	2026	2099
48	1158	1231	1303	1376	1449	1521	1594	1667	1739	1812	1885	1957	2030	2102
54	1166	1239	1311	1384	1457	1529	1602	1674	1747	1820	1892	1965	2037	2110
60	1176	1249	1321	1394	1467	1539	1612	1684	1757	1830	1902	1975	2048	2120
66	1187	1260	1332	1405	1478	1551	1623	1696	1769	1842	1914	1987	2060	2133
72	1199	1272	1345	1418	1490	1563	1636	1709	1782	1855	1928	2001	2074	2147
78	1204	1277	1350	1422	1495	1568	1640	1713	1786	1858	1931	2004	2076	2149
84	1210	1283	1355	1428	1500	1573	1645	1718	1790	1863	1935	2008	2080	2153
90	1216	1289	1361	1433	1506	1578	1650	1723	1795	1867	1940	2012	2084	2157
96	1223	1295	1367	1439	1512	1584	1656	1728	1800	1873	1945	2017	2089	2161
102	1230	1302	1374	1446	1518	1590	1662	1734	1806	1878	1950	2022	2094	2166
108	1237	1309	1381	1453	1524	1596	1668	1740	1812	1884	1956	2028	2100	2172
114	1244	1316	1388	1459	1531	1603	1675	1747	1819	1890	1962	2034	2106	2178
120	1251	1323	1395	1467	1538	1610	1682	1754	1825	1897	1969	2041	2112	2184
126	1259	1330	1402	1474	1545	1617	1689	1760	1832	1904	1975	2047	2119	2190
132	1266	1338	1410	1481	1553	1624	1696	1768	1839	1911	1982	2054	2125	2197
138	1274	1346	1417	1489	1560	1632	1703	1775	1846	1918	1989	2061	2132	2204
144	1282	1353	1425	1496	1568	1639	1711	1782	1854	1925	1996	2068	2139	2211

© 2013 American Concrete Pipe Association, all rights reserved.

Fill Height Tables are based on:
1. γs = 120 pcf
2. AASHTO HL-93 live load
3. Positive Projecting Embankment Condition - this gives conservative results in comparison to trench conditions

D-Load (lb/ft/ft) for Type 2 Bedding

Class I
Class II
Class III
Class IV
Class V
Special Design

Pipe Size (in)	Fill Height in Feet													
	29	30	31	32	33	34	35	36	37	38	39	40	41	42
12	2236	2312	2389	2465	2542	2618	2695	2772	2848	2925	3001	3078	3154	3231
15	2185	2259	2334	2409	2483	2558	2633	2707	2782	2857	2931	3006	3081	3155
18	2163	2237	2310	2384	2458	2532	2605	2679	2753	2827	2900	2974	3048	3122
21	2158	2231	2305	2378	2452	2525	2599	2672	2745	2819	2892	2966	3039	3113
24	2164	2238	2311	2385	2458	2532	2605	2679	2752	2826	2899	2973	3046	3120
27	2160	2233	2306	2380	2453	2526	2599	2672	2746	2819	2892	2965	3038	3112
30	2161	2234	2307	2380	2453	2526	2599	2673	2746	2819	2892	2965	3038	3111
33	2166	2239	2312	2385	2458	2531	2605	2678	2751	2824	2897	2970	3043	3116
36	2174	2247	2320	2394	2467	2540	2613	2687	2760	2833	2906	2979	3053	3126
42	2172	2244	2317	2390	2463	2536	2609	2681	2754	2827	2900	2973	3046	3118
48	2175	2248	2320	2393	2466	2538	2611	2684	2756	2829	2902	2974	3047	3119
54	2183	2255	2328	2400	2473	2546	2618	2691	2763	2836	2908	2981	3054	3126
60	2193	2266	2338	2411	2483	2556	2629	2701	2774	2847	2919	2992	3065	3137
66	2205	2278	2351	2424	2496	2569	2642	2715	2787	2860	2933	3006	3078	3151
72	2220	2293	2365	2438	2511	2584	2657	2730	2803	2876	2949	3022	3095	3168
78	2222	2295	2367	2440	2513	2585	2658	2731	2803	2876	2949	3021	3094	3167
84	2225	2298	2370	2443	2515	2588	2660	2733	2805	2878	2950	3023	3095	3168
90	2229	2301	2374	2446	2518	2591	2663	2735	2808	2880	2952	3025	3097	3169
96	2233	2306	2378	2450	2522	2594	2667	2739	2811	2883	2955	3028	3100	3172
102	2238	2311	2383	2455	2527	2599	2671	2743	2815	2887	2959	3031	3103	3175
108	2244	2316	2388	2460	2532	2604	2676	2748	2819	2891	2963	3035	3107	3179
114	2250	2322	2393	2465	2537	2609	2681	2753	2824	2896	2968	3040	3112	3184
120	2256	2328	2399	2471	2543	2615	2686	2758	2830	2902	2973	3045	3117	3189
126	2262	2334	2405	2477	2549	2620	2692	2764	2835	2907	2979	3050	3122	3194
132	2269	2340	2412	2483	2555	2627	2698	2770	2841	2913	2985	3056	3128	3199
138	2275	2347	2418	2490	2562	2633	2705	2776	2848	2919	2991	3062	3134	3205
144	2282	2354	2425	2497	2568	2640	2711	2783	2854	2925	2997	3068	3140	3211

© 2013 American Concrete Pipe Association, all rights reserved.

Fill Height Tables are based on:
1. γs = 120 pcf
2. AASHTO HL-93 live load
3. Positive Projecting Embankment Condition - this gives conservative results in comparison to trench conditions

D-Load (lb/ft/ft) for Type 3 Bedding

Class I
Class II
Class III
Class IV
Class V
Special Design

Pipe Size (in)	Fill Height in Feet													
	1	2	3	4	5	6	7	8	9	10	11	12	13	14
12	1518	1369	947	817	805	838	896	964	902	1000	1098	1196	1294	1392
15	1459	1318	916	794	783	815	872	939	880	975	1070	1165	1260	1355
18	1384	1285	897	781	772	804	860	926	870	963	1057	1150	1243	1337
21	1247	1263	886	775	767	799	855	921	867	959	1051	1144	1236	1329
24	1229	1248	879	772	765	798	854	920	868	960	1051	1143	1235	1327
27	1179	1209	858	763	759	795	853	919	872	963	1055	1147	1238	1330
30	1500	1260	887	786	777	812	868	933	878	970	1061	1153	1245	1337
33	1378	1218	871	780	775	813	871	936	886	978	1070	1162	1254	1345
36	1276	1189	857	776	774	815	875	941	895	987	1079	1172	1264	1356
42	1119	1113	829	765	770	815	875	942	903	995	1087	1179	1271	1363
48	1004	992	808	758	770	817	879	946	913	1005	1097	1189	1281	1373
54	963	958	791	753	771	822	884	953	926	1018	1109	1201	1293	1385
60	991	937	778	751	775	828	891	961	939	1031	1123	1216	1308	1400
66	952	920	772	751	779	835	900	970	954	1046	1138	1231	1323	1416
72	898	905	768	751	786	843	909	981	969	1062	1154	1247	1340	1433
78	853	890	762	752	790	847	913	985	977	1070	1162	1255	1348	1440
84	816	878	758	754	794	852	918	991	986	1079	1171	1263	1355	1448
90	786	866	755	756	798	857	924	996	1076	1088	1180	1272	1364	1456
96	760	833	753	759	803	862	930	1003	1083	1097	1189	1281	1373	1464
102	739	814	761	769	813	872	939	1012	1092	1174	1198	1290	1382	1473
108	722	805	770	778	822	882	949	1022	1102	1184	1208	1299	1391	1482
114	708	813	779	788	832	892	959	1032	1112	1194	1277	1309	1400	1492
120	696	821	788	796	842	902	969	1042	1121	1203	1287	1319	1410	1501
126	687	829	798	806	852	912	979	1052	1131	1213	1297	1382	1420	1511
132	679	837	802	816	863	922	989	1062	1141	1223	1307	1391	1477	1521
138	673	845	800	826	873	932	999	1072	1152	1233	1317	1401	1487	1531
144	669	853	808	837	883	943	1010	1082	1162	1244	1327	1411	1497	1583

© 2013 American Concrete Pipe Association, all rights reserved.

Fill Height Tables are based on:
1. γs = 120 pcf
2. AASHTO HL-93 live load
3. Positive Projecting Embankment Condition - this gives conservative results in comparison to trench conditions

D-Load (lb/ft/ft) for Type 3 Bedding

Class I
Class II
Class III
Class IV
Class V
Special Design

Pipe Size (in)	Fill Height in Feet													
	15	16	17	18	19	20	21	22	23	24	25	26	27	28
12	1490	1588	1686	1784	1882	1980	2078	2176	2274	2372	2470	2568	2666	2764
15	1450	1545	1640	1735	1830	1925	2020	2115	2210	2305	2401	2496	2591	2686
18	1430	1523	1617	1710	1803	1897	1990	2083	2177	2270	2363	2457	2550	2643
21	1421	1513	1606	1698	1790	1883	1975	2068	2160	2252	2345	2437	2529	2622
24	1419	1511	1603	1695	1786	1878	1970	2062	2154	2246	2338	2430	2521	2613
27	1422	1514	1605	1697	1789	1880	1972	2064	2155	2247	2339	2431	2522	2614
30	1428	1520	1612	1704	1795	1887	1979	2071	2162	2254	2346	2437	2529	2621
33	1437	1529	1621	1713	1805	1897	1989	2081	2173	2265	2357	2449	2541	2633
36	1449	1541	1633	1726	1818	1910	2003	2095	2187	2280	2372	2464	2557	2649
42	1455	1547	1639	1731	1823	1915	2007	2098	2190	2282	2374	2466	2558	2650
48	1465	1556	1648	1740	1832	1924	2016	2108	2200	2291	2383	2475	2567	2659
54	1477	1569	1661	1753	1845	1937	2029	2121	2213	2305	2397	2489	2581	2673
60	1492	1584	1676	1768	1861	1953	2045	2137	2229	2321	2413	2506	2598	2690
66	1508	1601	1693	1786	1878	1970	2063	2155	2248	2340	2433	2525	2617	2710
72	1526	1619	1711	1804	1897	1990	2083	2175	2268	2361	2454	2547	2639	2732
78	1533	1625	1718	1810	1903	1995	2088	2180	2273	2365	2458	2550	2643	2735
84	1540	1632	1725	1817	1909	2001	2094	2186	2278	2370	2463	2555	2647	2740
90	1548	1640	1732	1824	1916	2008	2100	2192	2284	2377	2469	2561	2653	2745
96	1556	1648	1740	1832	1924	2016	2108	2199	2291	2383	2475	2567	2659	2751
102	1565	1657	1748	1840	1932	2024	2115	2207	2299	2390	2482	2574	2666	2757
108	1574	1666	1757	1849	1940	2032	2123	2215	2307	2398	2490	2581	2673	2764
114	1583	1675	1766	1857	1949	2040	2132	2223	2315	2406	2498	2589	2680	2772
120	1593	1684	1775	1866	1958	2049	2140	2232	2323	2414	2506	2597	2688	2780
126	1602	1693	1785	1876	1967	2058	2149	2241	2332	2423	2514	2605	2697	2788
132	1612	1703	1794	1885	1976	2067	2158	2250	2341	2432	2523	2614	2705	2796
138	1622	1713	1804	1895	1986	2077	2168	2259	2350	2441	2532	2623	2714	2805
144	1632	1722	1813	1904	1995	2086	2177	2268	2359	2450	2541	2632	2723	2814

© 2013 American Concrete Pipe Association, all rights reserved.

Fill Height Tables are based on:
1. γs = 120 pcf
2. AASHTO HL-93 live load
3. Positive Projecting Embankment Condition - this gives conservative results in comparison to trench conditions

D-Load (lb/ft/ft) for Type 3 Bedding

Class I
Class II
Class III
Class IV
Class V
Special Design

Fill Height in Feet							
Pipe Size (in)	29	30	31	32	33	34	35
12	2862	2960	3058	3156	3254	3352	3450
15	2781	2876	2971	3066	3161	3256	3351
18	2737	2830	2923	3017	3110	3203	3297
21	2714	2807	2899	2991	3084	3176	3268
24	2705	2797	2889	2981	3073	3165	3256
27	2706	2797	2889	2981	3072	3164	3256
30	2713	2804	2896	2988	3080	3171	3263
33	2725	2817	2909	3001	3093	3185	3277
36	2741	2833	2926	3018	3110	3203	3295
42	2742	2834	2926	3018	3110	3202	3294
48	2751	2843	2935	3026	3118	3210	3302
54	2765	2857	2948	3040	3132	3224	3316
60	2782	2874	2966	3058	3151	3243	3335
66	2802	2895	2987	3080	3172	3265	3357
72	2825	2918	3011	3103	3196	3289	3382
78	2828	2920	3013	3105	3198	3290	3383
84	2832	2924	3016	3109	3201	3293	3385
90	2837	2929	3021	3113	3205	3297	3389
96	2843	2934	3026	3118	3210	3302	3394
102	2849	2941	3032	3124	3216	3308	3399
108	2856	2947	3039	3131	3222	3314	3405
114	2863	2955	3046	3138	3229	3320	3412
120	2871	2962	3054	3145	3236	3328	3419
126	2879	2970	3061	3153	3244	3335	3426
132	2887	2979	3070	3161	3252	3343	3434
138	2896	2987	3078	3169	3260	3351	3442
144	2905	2996	3087	3178	3269	3360	3450

© 2013 American Concrete Pipe Association, all rights reserved.

Fill Height Tables are based on:
1. γs = 120 pcf
2. AASHTO HL-93 live load
3. Positive Projecting Embankment Condition - this gives conservative results in comparison to trench conditions

D-Load (lb/ft/ft) for Type 4 Bedding

Class I
Class II
Class III
Class IV
Class V
Special Design

Pipe Size (in)	Fill Height in Feet													
	1	2	3	4	5	6	7	8	9	10	11	12	13	14
12	1579	1481	1111	1032	1071	1154	1264	1383	1372	1521	1671	1820	1969	2119
15	1519	1426	1073	998	1036	1116	1221	1336	1326	1616	1612	1756	1899	2042
18	1443	1391	1050	978	1015	1093	1195	1307	1297	1580	1576	1715	1854	1994
21	1306	1366	1035	966	1002	1079	1179	1288	1279	1557	1552	1688	1825	1961
24	1288	1349	1025	959	994	1070	1168	1276	1267	1541	1535	1670	1804	1938
27	1238	1309	1002	945	982	1060	1158	1265	1259	1531	1524	1657	1790	1922
30	1560	1360	1029	965	995	1070	1166	1270	1254	1524	1517	1648	1780	1911
33	1437	1316	1010	955	988	1064	1160	1264	1252	1520	1512	1642	1773	1903
36	1336	1285	993	947	982	1060	1157	1260	1251	1518	1509	1639	1768	1898
42	1181	1211	966	935	976	1057	1153	1256	1252	1518	1508	1636	1764	1892
48	1068	1090	941	927	973	1056	1152	1255	1257	1522	1511	1638	1765	1892
54	1029	1058	925	921	973	1058	1154	1257	1264	1529	1516	1642	1768	1894
60	1059	1038	912	918	975	1062	1158	1261	1273	1538	1523	1649	1774	1899
66	1021	1022	906	917	978	1066	1163	1266	1282	1548	1532	1657	1781	1906
72	969	1008	902	917	984	1072	1169	1272	1292	1559	1541	1666	1790	1914
78	927	996	899	920	990	1079	1176	1280	1303	1570	1551	1675	1799	1923
84	893	986	898	925	997	1086	1184	1288	1315	1582	1562	1686	1810	1933
90	866	978	898	931	1004	1094	1192	1296	1408	1595	1574	1697	1820	1944
96	844	948	899	936	1012	1102	1201	1305	1417	1608	1585	1708	1831	1955
102	826	932	911	949	1024	1115	1214	1318	1429	1685	1597	1720	1843	1966
108	812	927	923	962	1037	1128	1226	1330	1441	1698	1609	1732	1855	1978
114	801	938	935	975	1050	1141	1239	1343	1454	1712	1682	1745	1867	1990
120	793	949	947	986	1063	1154	1252	1356	1467	1726	1694	1757	1879	2002
126	786	960	959	999	1076	1167	1265	1369	1480	1740	1707	1823	1892	2014
132	782	971	967	1013	1090	1180	1278	1382	1493	1754	1720	1836	1952	2027
138	779	982	968	1026	1103	1194	1292	1395	1506	1769	1733	1848	1965	2040
144	778	994	980	1039	1116	1207	1305	1409	1519	1783	1746	1861	1978	2095

© 2013 American Concrete Pipe Association, all rights reserved.

Fill Height Tables are based on:
1. γs = 120 pcf
2. AASHTO HL-93 live load
3. Positive Projecting Embankment Condition - this gives conservative results in comparison to trench conditions

D-Load (lb/ft/ft) for Type 4 Bedding

Class I
Class II
Class III
Class IV
Class V
Special Design

Pipe Size (in)	Fill Height in Feet										
	15	16	17	18	19	20	21	22	23	24	25
12	2268	2417	2566	2716	2865	3014	3163	3313	3462	3611	3760
15	2185	2329	2472	2615	2759	2902	3045	3189	3332	3475	3618
18	2133	2272	2412	2551	2690	2830	2969	3108	3247	3387	3526
21	2098	2234	2370	2507	2643	2780	2916	3053	3189	3326	3462
24	2073	2207	2341	2476	2610	2744	2879	3013	3147	3282	3416
27	2055	2188	2320	2453	2586	2718	2851	2984	3116	3249	3382
30	2042	2174	2305	2436	2568	2699	2830	2962	3093	3225	3356
33	2033	2164	2294	2424	2554	2685	2815	2945	3075	3206	3336
36	2027	2156	2286	2415	2544	2674	2803	2932	3062	3191	3321
42	2020	2148	2276	2404	2532	2660	2788	2916	3044	3171	3299
48	2018	2145	2272	2399	2526	2653	2780	2907	3033	3160	3287
54	2020	2146	2273	2399	2525	2651	2777	2903	3029	3155	3281
60	2025	2150	2276	2401	2526	2652	2777	2903	3028	3153	3279
66	2031	2156	2281	2406	2531	2655	2780	2905	3030	3155	3280
72	2039	2163	2288	2412	2536	2661	2785	2909	3034	3158	3283
78	2047	2171	2295	2419	2543	2667	2791	2915	3039	3163	3287
84	2057	2181	2304	2428	2552	2675	2799	2923	3046	3170	3294
90	2067	2190	2314	2437	2561	2684	2807	2931	3054	3178	3301
96	2078	2201	2324	2447	2570	2693	2817	2940	3063	3186	3309
102	2089	2212	2335	2458	2581	2704	2826	2949	3072	3195	3318
108	2100	2223	2346	2469	2591	2714	2837	2959	3082	3205	3328
114	2112	2235	2357	2480	2602	2725	2848	2970	3093	3215	3338
120	2124	2247	2369	2491	2614	2736	2859	2981	3103	3226	3348
126	2137	2259	2381	2503	2626	2748	2870	2992	3115	3237	3359
132	2149	2271	2393	2515	2638	2760	2882	3004	3126	3248	3370
138	2162	2284	2406	2528	2650	2772	2894	3016	3138	3260	3382
144	2174	2296	2418	2540	2662	2784	2906	3028	3150	3272	3393

© 2013 American Concrete Pipe Association, all rights reserved.

The preceding fill height tables are based on a concrete pipe installed in a positive projecting embankment installation with a soil unit weight of 120 lbs/ft^3 and HL-93 live load per the AASHTO LRFD Bridge Design specifications at the surface. Pipe outside diameters were based on a wall C thickness since the larger outside diameters would represent the highest soil overburden load on the pipe. The required classes of pipe do not account for construction loads or any other load induced on the pipe prior to its completed installation, or live load in excess of HL-93.

Dimensions of Circular Concrete Pipe - Metric Units

Designated Internal Diameter mm	Actual Internal Diameter mm	Wall B		Wall C	
		Minimum Wall Thickness mm	Average Weight kg/m	Minimum Wall Thickness mm	Average Weight kg/m
300	305	50	162	69	197
375	381	57	216	75	262
450	457	63	253	82	335
525	533	69	327	88	417
600	610	75	430	94	505
675	686	82	500	100	602
750	762	88	598	107	708
825	838	94	695	113	821
900	914	100	832	119	940
975	991	113	923	125	1090
1050	1067	117	1057	132	1207
1200	1219	125	1324	144	1504
1350	1372	138	1589	157	1829
1500	1524	150	1927	169	2192
1650	1676	163	2295	182	2582
1800	1829	175	2695	194	2998
1950	1981	188	3125	207	3457
2100	2134	200	3585	219	3943
2250	2286	213	4078	232	4460
2400	2438	225	4598	244	5009
2550	2591	238	5179	257	5595
2700	2743	250	5752	269	6202
3000	3048	279	6344	298	7521
3600	3658	330	8104	349	10,540

Dimensions of Circular Concrete Pipe - Imperial Units

Internal Diameter inches	Wall A		Wall B		Wall C	
	Minimum Wall Thickness inches	Average Weight pounds per foot	Minimum Wall Thickness inches	Average Weight pounds per foot	Minimum Wall Thickness inches	Average Weight pounds per foot
12	1-3/4	79	2	93	2-3/4	133
15	1-7/8	103	2-1/4	127	3	177
18	2	131	2-1/2	168	3-1/4	226
21	2-1/4	171	2-3/4	214	3-1/2	281
24	2-1/2	217	3	264	3-3/4	341
27	2-5/8	255	3-1/4	322	4	406
30	2-3/4	295	3-1/2	384	4-1/4	476
33	2-7/8	336	3-3/4	451	4-1/2	552
36	3	383	4	524	4-3/4	633
42	3-1/2	520	4-1/2	686	5-1/4	811
48	4	683	5	867	5-3/4	1011
54	4-1/2	864	5-1/2	1068	6-1/4	1232
60	5	1064	6	1295	6-3/4	1473
66	5-1/2	1287	6-1/2	1542	7-1/4	1735
72	6	1532	7	1811	7-3/4	2023
78	6-1/2	1797	7-1/2	2100	8-1/4	2329
84	7	2085	8	2409	8-3/4	2656
90	7-1/2	2395	8-1/2	2740	9-1/4	3004
96	8	2710	9	3090	9-3/4	3374
102	8-1/2	3078	9-1/2	3480	10-1/4	3765
108	9	3446	10	3865	10-3/4	4178
114	9-1/2	3840	10-1/2	4278	11-1/4	4611
120	10	4263	11	4716	11-3/4	5066
126	10-1/2	4690	11-1/2	5175	12-1/4	5542
132	11	5148	12	5655	12-3/4	6040
138	11-1/2	5627	12-1/2	6156	13-1/4	6558
144	12	6126	13	6679	13-3/4	7098
150	12-1/2	6647	13-1/2	7223	14-1/4	7659
156	13	7190	14	7789	14-3/4	8242
162	13-1/2	7754	14-1/2	8375	15-1/4	8846
168	14	8339	15	8983	15-3/4	9471
174	14-1/2	8945	15-1/2	9612	16-1/4	10,117
180	15	9572	16	10,263	16-3/4	10,785

American **Concrete Pipe** Association
E-mail: info@concretepipe.org
www.concretepipe.org

FOR HORIZONTAL ELLIPTICAL AND ARCH CONCRETE PIPE

LRFD FILL HEIGHT TABLES

American
Concrete Pipe
Association

Standard Trench/Embankment Installation

Concrete pipe should be installed in accordance with the AASHTO LRFD Bridge Construction Specifications, Section 27 or ASTM C1479. Figure 1 shows the basic pipe and soil terminology.

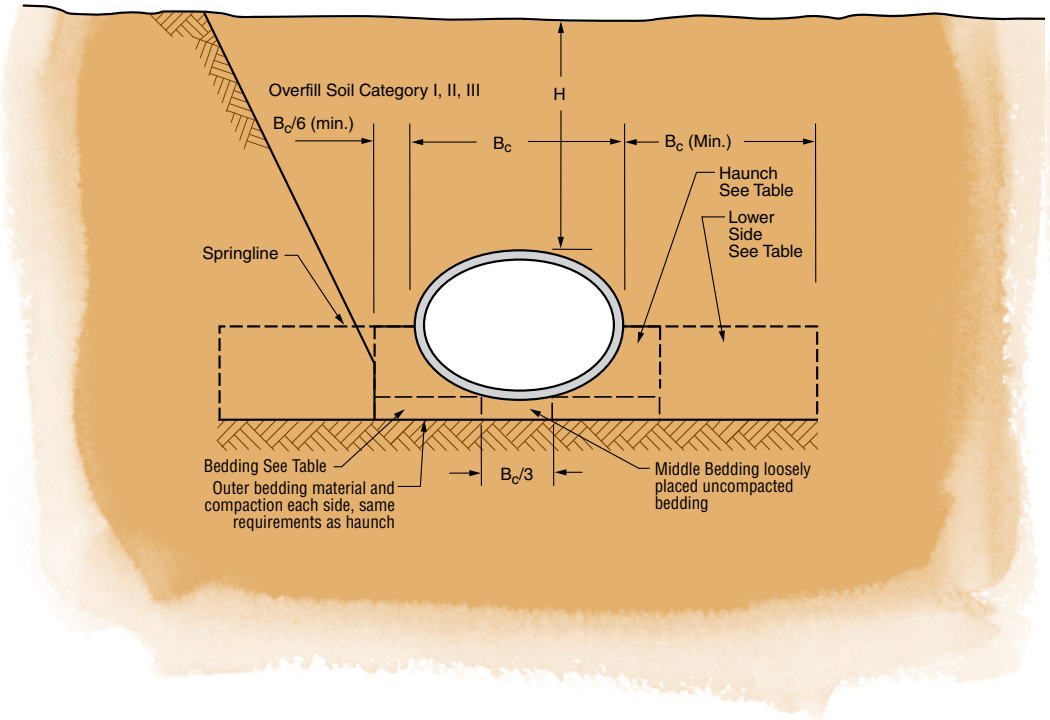

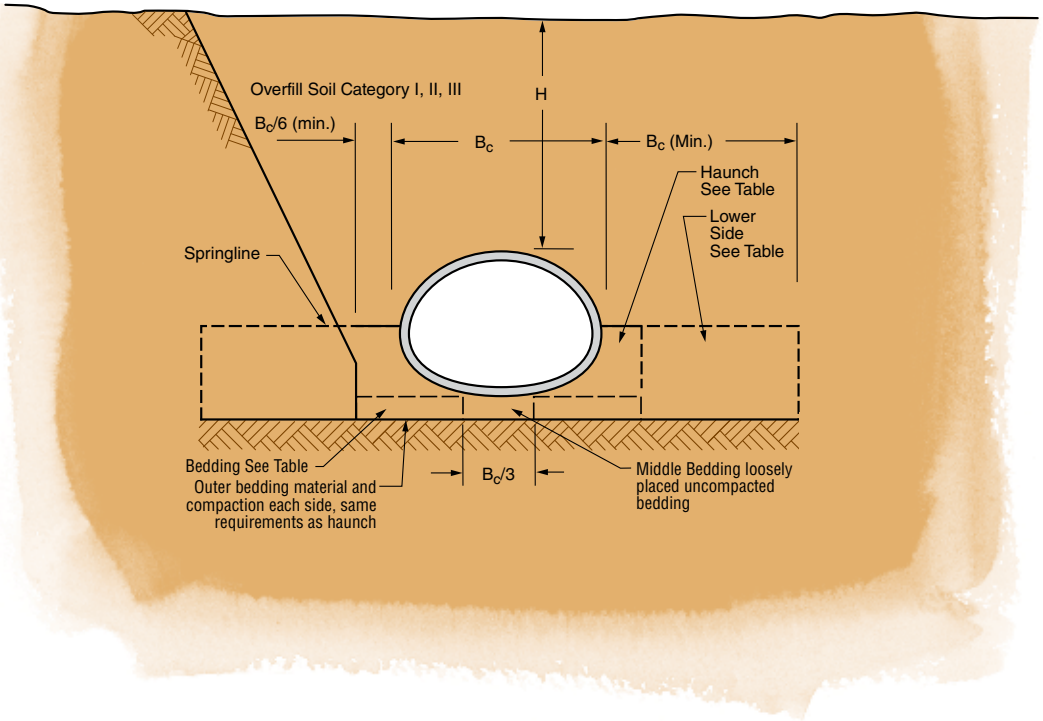

There are two types of Standard Installations for horizontal elliptical and arch concrete pipe, each with its own soil and compaction requirements. Type 2 bedding provides better support using well compacted granular material, while Type 3 provides for less support allowing the use of silts. These choices provide flexibility and versatility for the designer and contractor, as well as performance and economy for the owner that are not available with other types of pipe.

The soil and compaction requirements are provided in Table 1. Table 2 shows the equivalent soil designations per the Unified Soil Classification System (USCS) and AASHTO.

To facilitate your selection of the proper reinforced concrete pipe using the most beneficial Standard Installation for the conditions at the site, fill height tables are provided on the following pages. The required 0.01 inch crack D-Loads in units of lbs per linear foot per foot of span are provided numerically and the class of pipe per ASTM C506 (AASHTO M 206) or ASTM C507 (AASHTO M 207) meeting this requirement is designated by color of the cell.

© 2012 American Concrete Pipe Association, all rights reserved.

Table 1: Standard Installation Soils and Minimum Compaction Requirements			
Installation Type	**Bedding Thickness**	**Haunch and Outer Bedding**	**Lower Side**
Type 2	D_0/24 minimum, not less than 3" (75 mm) If rock foundation, use D_0/12 minimum, not less than 6" (150 mm)	90% Category I or 95% Category II	85% Category I, 90% Category II, or 95% Category III
Type 3	D_0/24 minimum, not less than 3" (75 mm) If rock foundation, use D_0/12 minimum, not less than 6" (150 mm)	85% Category I, 90% Category II, or 95% Category III	85% Category I, 90% Category II, or 95% Category III

Reference: AASHTO LRFD Bridge Construction Specifications, Section 27

Table 3: Reinforced Pipe Classes for 0.01 inch Crack Per ASTM C 506 (lbs/ft/ft)	
Class A-II	≤ 1000
Class A-III	≤ 1350
Class A-IV	≤ 2000
Special Design	> 2000

Table 4: Reinforced Pipe Classes for 0.01 inch Crack Per ASTM C 507 (lbs/ft/ft)	
Class HE-A	≤ 600
Class HE-I	≤ 800
Class HE-II	≤ 1000
Class HE-III	≤ 1350
Class HE-IV	≤ 2000
Special Design	> 2000

Table 2: Equivalent USCS and AASHTO Soil Classifications for Standard Installation Soil Designations				
Representative Soil Types			**Percent Compaction**	
SIDD	**USCS**	**AASHTO**	**Standard Proctor**	**Modified Proctor**
Gravelly Sand (Category I)	SW, SP, GW, GP	A1, A3	100 95 90 85 80 61	95 90 85 80 75 59
Sandy Silt (Category II)	GM, SM, ML, Also GC, SC with less than 20% passing #200 sieve	A2, A4	100 95 90 85 80 49	95 90 85 80 75 46
Silty Clay (Category III)	CL, MH, GC, SC	A5, A6	100 95 90 85 80 45	90 85 80 75 70 40
	CH Not allowed for haunch or bedding	A7	100 95 90 45	90 85 80 40

Reference: AASHTO LRFD Bridge Construction Specifications, Section 27

NOTES:
1. Compaction and soil symbols – i.e. "95% Category I" refers to Category I soil material with a minimum Standard Proctor compaction of 95%. See Table 2 for equivalent Modified Proctor values.
2. Soil in the outer bedding, haunch, and lower side zones shall be compacted to at least the same compaction as the majority of soil in the overfill zone.

© 2012 American Concrete Pipe Association, all rights reserved.

Horizontal Elliptical Pipe

The following Fill Height Tables have been developed by the American Concrete Pipe Association (ACPA) using the indirect design method in accordance with Section 12.10.4.3 of the AASHTO LRFD Bridge Design Specification, 4th Edition, 2007 with 2008 Interim. Live load was distributed through the pipe in accordance with Chapter 4 of the ACPA Concrete Pipe Design Manual.

Fill Height Tables are based on:

1. γ_s = 120 pcf
2. AASHTO HL-93 live load
3. Positive Projecting Embankment Condition - this gives conservative results in comparison to trench conditions
4. A projection ratio of 0.9.

D-Load (lb/ft/ft) for Type 2 Bedding

- Class HE-A
- Class HE-I
- Class HE-II
- Class HE-III
- Class HE-IV
- Special Design

Inside Rise x Inside Span (inches)	Fill Height (feet)														
	0.5	1	1.5	2	2.5	3	4	5	6	7	8	9	10	11	12
14 x 23	1398	1197	1087	904	796	733	682	686	724	780	843	915	991	1069	1148
19 x 30	1265	989	895	852	757	703	662	671	712	768	831	903	978	1055	1133
22 x 34	1084	857	785	773	737	686	651	662	704	761	824	896	970	1047	1125
24 x 38	1049	857	719	701	712	676	644	657	699	756	820	891	966	1042	1119
27 x 42	1133	863	680	618	589	588	606	642	690	747	810	881	954	1029	1106
29 x 45	1116	855	676	618	591	592	612	651	701	760	824	897	972	1049	1127
32 x 49	1117	877	701	625	581	584	607	647	698	757	822	895	969	1046	1124
34 x 53	1090	860	688	616	575	579	603	644	696	755	820	893	968	1044	1122
38 x 60	963	879	766	644	595	570	597	640	693	754	819	892	967	1043	1121
43 x 68	889	796	752	663	599	580	592	637	692	753	819	892	966	1043	1120
48 x 76	838	726	691	669	604	591	587	633	689	751	818	891	966	1042	1119
53 x 83	752	660	635	619	588	592	589	633	690	753	820	894	969	1045	1123
58 x 91	676	602	599	588	578	582	599	631	689	753	820	894	969	1046	1123
63 x 98	644	578	592	582	580	575	613	637	695	759	826	900	975	1052	1129
68 x 106	612	585	570	563	572	574	606	647	698	762	830	903	978	1055	1132
72 x 113	591	603	556	551	572	579	605	655	704	768	836	909	984	1061	1138
77 x 121	569	582	540	559	560	566	606	657	714	772	839	913	988	1064	1141

© 2012 American Concrete Pipe Association, all rights reserved.

Horizontal Elliptical Pipe

Fill Height Tables are based on:
1. γ_s = 120 pcf
2. AASHTO HL-93 live load
3. Positive Projecting Embankment Condition - this gives conservative results in comparison to trench conditions
4. A projection ratio of 0.9.

D-Load (lb/ft/ft) for Type 2 Bedding

Class HE-A
Class HE-I
Class HE-II
Class HE-III
Class HE-IV
Special Design

Inside Rise x Inside Span (inches)	Fill Height (feet)														
	13	14	15	16	17	18	19	20	21	22	23	24	25	26	27
14 x 23	1229	1311	1394	1478	1563	1647	1733	1818	1904	1990	2077	2164	2250	2337	2425
19 x 30	1213	1294	1376	1458	1541	1624	1708	1793	1877	1962	2047	2132	2217	2303	2388
22 x 34	1204	1284	1366	1447	1530	1613	1696	1779	1863	1947	2031	2116	2200	2285	2370
24 x 38	1198	1278	1359	1440	1522	1604	1687	1770	1853	1936	2020	2104	2188	2272	2356
27 x 42	1184	1262	1342	1422	1502	1583	1665	1746	1828	1910	1993	2075	2158	2241	2324
29 x 45	1206	1286	1367	1449	1531	1614	1697	1780	1863	1947	2031	2115	2199	2284	2368
32 x 49	1203	1283	1364	1445	1527	1609	1692	1775	1858	1941	2024	2108	2192	2276	2360
34 x 53	1201	1280	1361	1442	1523	1605	1687	1770	1853	1935	2019	2102	2185	2269	2353
38 x 60	1199	1279	1359	1440	1521	1603	1685	1767	1849	1932	2015	2098	2181	2264	2347
43 x 68	1199	1278	1358	1438	1519	1600	1682	1764	1846	1928	2010	2093	2176	2258	2341
48 x 76	1198	1277	1356	1437	1517	1598	1679	1761	1842	1924	2006	2089	2171	2253	2336
53 x 83	1201	1280	1360	1440	1521	1601	1683	1764	1846	1927	2009	2091	2174	2256	2338
58 x 91	1202	1281	1360	1440	1520	1601	1682	1763	1845	1926	2008	2090	2172	2254	2336
63 x 98	1207	1286	1366	1446	1526	1606	1687	1768	1850	1931	2013	2095	2176	2258	2340
68 x 106	1210	1289	1368	1448	1528	1608	1689	1770	1851	1932	2014	2095	2177	2259	2341
72 x 113	1216	1295	1374	1454	1534	1614	1695	1776	1857	1938	2019	2101	2182	2264	2346
77 x 121	1219	1298	1377	1457	1536	1617	1697	1778	1859	1940	2021	2102	2184	2265	2347

© 2012 American Concrete Pipe Association, all rights reserved.

Horizontal Elliptical Pipe

Fill Height Tables are based on:
1. γ_s = 120 pcf
2. AASHTO HL-93 live load
3. Positive Projecting Embankment Condition - this gives conservative results in comparison to trench conditions
4. A projection ratio of 0.5.

D-Load (lb/ft/ft) for Type 3 Bedding

Class HE-A
Class HE-I
Class HE-II
Class HE-III
Class HE-IV
Special Design

Inside Rise x Inside Span (inches)	Fill Height (feet)														
	0.5	1	1.5	2	2.5	3	4	5	6	7	8	9	10	11	12
14 x 23	1499	1462	1338	1123	997	925	871	884	938	1013	1098	1194	1294	1396	1501
19 x 30	1296	1092	1087	1062	952	890	849	868	925	1001	1085	1180	1279	1380	1484
22 x 34	1116	952	958	967	928	872	836	858	917	993	1078	1173	1271	1372	1474
24 x 38	1082	910	866	882	900	860	829	853	912	989	1074	1168	1266	1366	1468
27 x 42	1167	917	781	760	752	755	784	835	902	978	1062	1156	1252	1351	1452
29 x 45	1152	911	779	762	756	761	794	849	918	997	1083	1178	1277	1378	1481
32 x 49	1154	935	774	749	747	754	789	846	915	995	1081	1177	1276	1376	1479
34 x 53	1129	919	764	741	741	749	786	844	914	994	1080	1176	1274	1375	1477
38 x 60	1003	940	847	736	731	741	783	842	914	995	1082	1177	1276	1376	1478
43 x 68	931	860	835	761	722	735	780	842	915	997	1084	1180	1279	1379	1480
48 x 76	881	792	776	772	718	728	777	841	915	998	1086	1182	1280	1380	1482
53 x 83	797	729	724	727	708	726	778	844	920	1004	1092	1189	1287	1387	1489
58 x 91	723	673	690	698	703	718	777	845	922	1006	1096	1192	1291	1391	1492
63 x 98	694	651	686	695	711	717	786	855	933	1017	1106	1203	1301	1401	1503
68 x 106	665	661	666	679	707	721	778	863	941	1025	1114	1210	1308	1408	1509
72 x 113	647	681	655	670	710	733	780	869	952	1036	1124	1221	1319	1419	1520
77 x 121	627	662	641	681	700	725	787	866	960	1044	1132	1228	1326	1426	1527

© 2012 American Concrete Pipe Association, all rights reserved.

Horizontal Elliptical Pipe

Fill Height Tables are based on:
1. γ_s = 120 pcf
2. AASHTO HL-93 live load
3. Positive Projecting Embankment Condition - this gives conservative results in comparison to trench conditions
4. A projection ratio of 0.5.

D-Load (lb/ft/ft) for Type 3 Bedding

Class HE-A
Class HE-I
Class HE-II
Class HE-III
Class HE-IV
Special Design

Inside Rise x Inside Span (inches)	Fill Height (feet)														
	13	14	15	16	17	18	19	20	21	22	23	24	25	26	27
14 x 23	1607	1715	1824	1933	2044	2155	2267	2379	2491	2604	2717	2830	2943	3057	3171
19 x 30	1588	1695	1802	1910	2018	2127	2237	2347	2458	2568	2679	2791	2902	3014	3125
22 x 34	1578	1684	1790	1897	2005	2113	2222	2331	2441	2550	2660	2771	2881	2992	3103
24 x 38	1572	1677	1782	1889	1996	2103	2211	2320	2429	2538	2647	2756	2866	2976	3086
27 x 42	1554	1657	1761	1866	1971	2077	2184	2290	2398	2505	2613	2720	2828	2937	3045
29 x 45	1585	1690	1796	1903	2010	2118	2227	2336	2445	2554	2664	2774	2884	2994	3104
32 x 49	1582	1687	1793	1899	2006	2114	2222	2330	2439	2547	2657	2766	2875	2985	3095
34 x 53	1580	1685	1790	1896	2003	2110	2217	2325	2433	2542	2650	2759	2868	2977	3087
38 x 60	1581	1685	1790	1896	2002	2109	2216	2323	2431	2539	2647	2756	2864	2973	3082
43 x 68	1583	1687	1791	1897	2002	2109	2215	2322	2429	2537	2644	2752	2860	2968	3076
48 x 76	1584	1688	1792	1897	2002	2108	2214	2321	2427	2534	2642	2749	2856	2964	3072
53 x 83	1592	1695	1799	1904	2009	2115	2221	2327	2434	2541	2648	2755	2862	2970	3077
58 x 91	1595	1698	1802	1907	2012	2117	2223	2329	2435	2542	2649	2755	2862	2970	3077
63 x 98	1605	1708	1812	1916	2021	2127	2232	2338	2444	2551	2657	2764	2871	2978	3085
68 x 106	1611	1714	1818	1922	2027	2132	2237	2343	2449	2555	2661	2767	2874	2981	3088
72 x 113	1622	1725	1828	1932	2037	2142	2247	2352	2458	2564	2670	2777	2883	2990	3097
77 x 121	1629	1731	1835	1939	2043	2148	2253	2358	2464	2569	2675	2782	2888	2994	3101

© 2012 American Concrete Pipe Association, all rights reserved.

Arch Pipe

Fill Height Tables are based on:
1. γ_s = 120 pcf
2. AASHTO HL-93 live load
3. Positive Projecting Embankment Condition - this gives conservative results in comparison to trench conditions
4. A projection ratio of 0.9.

D-Load (lb/ft/ft) for Type 2 Bedding

- Class A-II
- Class A-III
- Class A-IV
- Special Design

Inside Rise x Inside Span (inches)	Fill Height (feet)														
	0.5	1	1.5	2	2.5	3	4	5	6	7	8	9	10	11	12
11 x 18	1875	1489	1138	940	823	754	696	696	732	786	849	921	997	1075	1155
13½ x 22	1476	1259	1087	902	794	730	678	681	718	772	834	906	981	1058	1137
15½ x 26	1404	1059	1030	859	758	699	651	656	693	746	806	875	947	1022	1098
18 x 28½	1234	941	925	855	759	703	660	667	707	762	825	896	971	1047	1125
22½ x 36¼	1116	907	754	732	726	677	643	654	696	752	815	886	960	1035	1113
$26^5/_8$ x $43^3/_8$	1136	865	681	619	590	589	607	643	692	749	812	883	957	1032	1110
$31^5/_{16}$ x $51^1/_8$	1111	872	695	618	574	576	598	637	687	745	809	880	954	1029	1106
36 x 58½	1006	859	714	621	576	565	591	632	684	743	807	879	953	1028	1105
40 x 65	883	818	749	630	583	560	588	631	684	744	809	881	955	1031	1108
45 x 73	886	762	720	691	605	550	582	627	681	742	808	880	954	1030	1107
54 x 88	709	625	603	591	572	583	584	624	681	743	810	883	958	1033	1110
62 x 102	620	591	573	564	572	574	603	635	686	750	817	890	965	1041	1118
72 x 115	577	589	543	550	559	567	597	646	695	755	822	895	969	1045	1121
77½ x 122	563	576	534	553	554	560	600	650	706	764	831	904	978	1054	1130
$87^1/_8$ x 138	530	546	513	534	538	547	587	641	702	771	840	913	988	1063	1140

© 2012 American Concrete Pipe Association, all rights reserved.

Arch Pipe

Fill Height Tables are based on:
1. γ_s = 120 pcf
2. AASHTO HL-93 live load
3. Positive Projecting Embankment Condition - this gives conservative results in comparison to trench conditions
4. A projection ration of 0.5.

D-Load (lb/ft/ft) for Type 2 Bedding

- Class A-II
- Class A-III
- Class A-IV
- Special Design

	Fill Height (feet)														
Inside Rise x Inside Span (inches)	**13**	**14**	**15**	**16**	**17**	**18**	**19**	**20**	**21**	**22**	**23**	**24**	**25**	**26**	**27**
11 x 18	1237	1319	1403	1487	1572	1658	1744	1830	1917	2004	2091	2178	2266	2354	2442
13½ x 22	1217	1298	1380	1463	1547	1631	1715	1800	1885	1971	2056	2142	2228	2314	2401
15½ x 26	1175	1254	1333	1413	1493	1574	1656	1738	1820	1902	1985	2067	2150	2233	2316
18 x 28½	1204	1285	1366	1448	1531	1614	1697	1781	1865	1949	2034	2118	2203	2288	2373
22½ x 36¼	1191	1271	1351	1432	1513	1595	1678	1760	1843	1926	2010	2093	2177	2261	2344
$26^5/_8$ x $43^3/_8$	1188	1267	1347	1427	1508	1590	1671	1753	1836	1918	2001	2084	2167	2250	2334
$31^5/_{16}$ x $51^1/_8$	1184	1262	1342	1422	1502	1583	1665	1746	1828	1910	1992	2075	2157	2240	2323
36 x 58½	1183	1261	1340	1420	1501	1581	1662	1744	1825	1907	1989	2071	2153	2235	2318
40 x 65	1186	1264	1344	1424	1504	1584	1665	1747	1828	1910	1992	2074	2156	2238	2320
45 x 73	1185	1263	1342	1422	1502	1582	1663	1744	1825	1907	1988	2070	2152	2234	2316
54 x 88	1188	1267	1346	1425	1505	1585	1666	1746	1827	1908	1990	2071	2153	2234	2316
62 x 102	1196	1274	1353	1433	1513	1593	1673	1754	1835	1916	1997	2078	2160	2241	2323
72 x 115	1198	1276	1355	1434	1513	1593	1672	1752	1833	1913	1994	2074	2155	2236	2317
77½ x 122	1207	1285	1364	1443	1522	1602	1681	1761	1842	1922	2003	2083	2164	2245	2326
$87^1/_8$ x 138	1217	1295	1373	1452	1531	1611	1690	1770	1850	1930	2011	2091	2172	2253	2333

© 2012 American Concrete Pipe Association, all rights reserved.

Arch Pipe

Fill Height Tables are based on:
1. γ_s = 120 pcf
2. AASHTO HL-93 live load
3. Positive Projecting Embankment Condition - this gives conservative results in comparison to trench conditions
4. A projection ratio of 0.9.

D-Load (lb/ft/ft) for Type 3 Bedding

- Class A-II
- Class A-III
- Class A-IV
- Special Design

	Fill Height (feet)														
Inside Rise x Inside Span (inches)	**0.5**	**1**	**1.5**	**2**	**2.5**	**3**	**4**	**5**	**6**	**7**	**8**	**9**	**10**	**11**	**12**
11 x 18	2009	1816	1400	1165	1028	948	886	894	946	1020	1104	1200	1300	1403	1508
13½ x 22	1582	1537	1337	1120	993	920	865	876	930	1004	1087	1182	1280	1382	1485
15½ x 26	1433	1295	1269	1068	950	882	833	846	898	970	1051	1142	1238	1336	1436
18 x 28½	1264	1155	1143	1065	952	889	845	862	918	993	1077	1171	1269	1370	1472
22½ x 36¼	1148	958	906	918	916	861	827	849	907	983	1066	1160	1258	1357	1459
$26^5/_8$ x $43^3/_8$	1170	919	782	761	753	756	786	838	904	981	1065	1160	1257	1356	1457
$31^5/_{16}$ x $51^1/_8$	1147	928	766	741	737	744	778	833	901	979	1064	1158	1255	1354	1455
36 x 58½	1043	918	791	724	725	734	773	830	900	979	1065	1159	1256	1356	1456
40 x 65	922	879	830	723	719	730	772	832	904	984	1070	1165	1263	1362	1463
45 x 73	927	825	803	789	714	723	768	830	903	985	1071	1167	1264	1363	1464
54 x 88	752	692	690	697	691	714	767	833	909	992	1080	1176	1274	1373	1474
62 x 102	668	662	664	675	702	715	769	845	922	1006	1095	1191	1289	1388	1489
72 x 115	630	664	639	665	694	717	769	852	935	1018	1106	1202	1299	1398	1498
77½ x 122	619	654	634	673	692	717	778	857	949	1033	1121	1216	1313	1412	1512
$87^1/_8$ x 138	592	628	617	658	682	710	777	859	953	1049	1140	1235	1332	1431	1530

© 2012 American Concrete Pipe Association, all rights reserved.

Arch Pipe

Fill Height Tables are based on:
1. γ_s = 120 pcf
2. AASHTO HL-93 live load
3. Positive Projecting Embankment Condition - this gives conservative results in comparison to trench conditions
4. A projection ration of 0.5.

D-Load (lb/ft/ft) for Type 3 Bedding

- Class A-II
- Class A-III
- Class A-IV
- Special Design

Inside Rise x Inside Span (inches)	Fill Height (feet)														
	13	14	15	16	17	18	19	20	21	22	23	24	25	26	27
11 x 18	1615	1724	1833	1944	2055	2167	2279	2392	2506	2619	2733	2848	2962	3077	3191
13½ x 22	1591	1697	1805	1914	2023	2133	2244	2354	2466	2577	2689	2801	2914	3026	3139
15½ x 26	1537	1640	1744	1849	1954	2060	2167	2274	2381	2488	2596	2704	2813	2921	3030
18 x 28½	1577	1682	1789	1896	2004	2113	2222	2331	2441	2551	2662	2772	2883	2994	3106
22½ x 36¼	1562	1666	1771	1877	1984	2091	2199	2307	2415	2524	2633	2742	2851	2961	3070
$26^5/_8$ x $43^3/_8$	1560	1663	1768	1873	1979	2086	2193	2300	2408	2516	2624	2732	2841	2950	3058
$31^5/_{16}$ x $51^1/_8$	1557	1660	1764	1869	1975	2080	2187	2293	2400	2508	2615	2723	2830	2938	3047
36 x 58½	1558	1661	1765	1869	1974	2080	2186	2292	2399	2505	2613	2720	2827	2935	3042
40 x 65	1565	1668	1771	1876	1981	2086	2192	2298	2405	2511	2618	2726	2833	2940	3048
45 x 73	1566	1669	1772	1876	1981	2086	2192	2297	2404	2510	2616	2723	2830	2937	3044
54 x 88	1576	1678	1782	1886	1990	2095	2200	2306	2411	2517	2623	2730	2836	2943	3049
62 x 102	1591	1694	1797	1901	2005	2110	2215	2320	2426	2531	2637	2744	2850	2956	3063
72 x 115	1599	1700	1803	1906	2009	2113	2218	2322	2427	2532	2637	2742	2848	2953	3059
77½ x 122	1613	1715	1817	1920	2024	2128	2232	2336	2441	2546	2651	2756	2862	2967	3073
$87^1/_8$ x 138	1631	1733	1835	1938	2041	2145	2249	2353	2458	2562	2667	2772	2877	2983	3088

© 2012 American Concrete Pipe Association, all rights reserved.

The preceding fill height tables are based on a concrete pipe installed in a positive projecting embankment installation with a soil unit weight of 120 lbs/ft^3 and HL-93 live load per the AASHTO LRFD Bridge Design specifications at the surface. The required classes of pipe do not account for construction loads or any other load induced on the pipe prior to its completed installation, or live load in excess of HL-93.

Dimensions of Elliptical Concrete Pipe - Metric Units

Normal Equivalent Round size	Minor Axis, mm	Major Axis, mm	Minimum Wall Thick-ness, mm	Water-Way Area, m^2	Approximate Mass kg/m
450	365	575	69	.17	290
600	490	770	82	.31	446
675	550	865	88	.38	543
750	610	960	94	.47	640
825	670	1055	94	.59	707
900	730	1150	113	.68	930
975	795	1250	119	.82	1071
1050	855	1345	125	.95	1213
1200	975	1535	138	1.20	1488
1350	1095	1730	150	1.55	1838
1500	1220	1920	163	1.90	2195
1650	1340	2110	175	2.30	2597
1800	1465	2305	188	2.73	3036
1950	1585	2495	200	3.21	3497
2100	1705	2690	213	3.73	3988
2250	1830	2880	225	4.28	4538
2400	1950	3070	238	4.87	5089
2550	2075	3265	244	5.49	5543
2700	2195	3455	250	6.17	6026
2850	2315	3648	263	6.86	6652
3000	2440	3840	275	7.63	7336
3300	2680	4225	300	9.22	8780
3600	2925	4610	325	11.00	10416

Dimensions of Elliptical Concrete Pipe - Imperial Units

Equivalent Round Size, inches	Minor Axis, inches	Major Axis, inches	Minimum Wall Thickness, inches	Water-Way Area, square feet	Approximate Weight, pounds per foot
18	14	23	2¾	1.8	195
24	19	30	3¼	3.3	300
27	22	34	3½	4.1	365
30	24	38	3¾	5.1	430
33	27	42	3¾	6.3	475
36	29	45	4½	7.4	625
39	32	49	4¾	8.8	720
42	34	53	5	10.2	815
48	38	60	5½	12.9	1000
54	43	68	6	16.6	1235
60	48	76	6½	20.5	1475
66	53	83	7	24.8	1745
72	58	91	7½	29.5	2040
78	63	98	8	34.6	2350
84	68	106	8½	40.1	2680
90	72	113	9	46.1	3050
96	77	121	9½	52.4	3420
102	82	128	9¾	59.2	3725
108	87	136	10	66.4	4050
114	92	143	10½	74.0	4470
120	97	151	11	82.0	4930
132	106	166	12	99.2	5900
144	116	180	13	118.6	7000

© 2012 American Concrete Pipe Association, all rights reserved.

The preceding fill height tables are based on a concrete pipe installed in a positive projecting embankment installation with a soil unit weight of 120 lbs/ft^3 and HL-93 live load per the AASHTO LRFD Bridge Design specifications at the surface. The required classes of pipe do not account for construction loads or any other load induced on the pipe prior to its completed installation, or live load in excess of HL-93.

Dimensions of Arch Concrete Pipe - Metric Units

Normal Equivalent Round size	Minor Rise, mm	Major Span, mm	Minimum Wall Thick-ness, mm	Water-Way Area, m^2	Approximate Mass kg/m
375	280	460	57	0.1	187
450	345	560	63	0.15	252
525	395	660	69	0.2	321
600	460	725	75	0.26	390
750	570	920	88	0.41	570
900	675	1110	100	0.59	778
1050	795	1300	113	0.82	1021
1200	915	1485	125	1.06	1296
1350	1015	1650	138	1.33	1582
1500	1145	1855	150	1.64	1935
1800	1370	2235	175	2.38	2710
2100	1575	2590	200	3.21	3585
2250	1830	2920	213	4.13	4310
2400	1960	3100	225	4.8	4874
2700	2215	3505	250	6.13	6122
3000	2460	3910	275	7.6	7499
3300	2705	4285	250	9.21	7365

Dimensions of Arch Concrete Pipe - Imperial Units

Equivalent Round Size, inches	Minor Rise, inches	Major Span, inches	Minimum Wall Thickness, inches	Water-Way Area, square feet	Approximate Weight, pounds per foot
15	11	18	2¼	1.1	125
18	13½	22	2½	1.65	170
21	15½	26	2¾	2.2	215
24	18	28½	3	2.8	260
30	22½	36¼	3½	4.4	385
36	26 5/8	43¾	4	6.4	525
42	31 5/16	51 1/8	4½	8.8	690
48	36	58½	5	11.4	875
54	40	65	5½	14.3	1070
60	45	73	6	17.7	1310
72	54	88	7	25.6	1830
84	62	102	8	34.6	2415
90	72	115	8½	44.5	2910
96	77¼	122	9	51.7	3285
108	87 1/8	138	10	66.0	4125
120	96 7/8	154	11	81.8	5050
132	106½	168¾	10	99.1	4970

© 2012 American Concrete Pipe Association, all rights reserved.

American **Concrete Pipe** Association
E-mail: info@concretepipe.org
www.concretepipe.org

Resource # 16-202 (07/09)

CITY OF PEACHTREE CITY

LOCAL DESIGN MANUAL | 2016 EDITION

Appendix C – General Peachtree City Technical Specifications for Drainage Systems

October 2016

PEACHTREE CITY

GENERAL TECHNICAL SPECIFICATIONS

for

Drainage Projects

July 31, 2013

CITY OF PEACHTREE CITY
FAYETTE COUNTY, GEORGIA

TABLE OF CONTENTS

SECTION	TITLE	PAGES
-	Introduction	1 Thru 1
02 41 00	Demolition	1 Thru 5
03 33 00	Cast-in-Place Concrete General Applications	1 Thru 11
31 10 00	Site Clearing	1 Thru 5
31 14 14	Topsoil	1 Thru 3
31 20 00	Earth Moving	1 Thru 18
31 23 16	Trench Excavation and Backfill	1 Thru 17
32 11 00	Base Courses	1 Thru 2
32 12 00	Flexible Paving	1 Thru 6
32 13 13	Concrete Paving	1 Thru 14
32 92 13	Seeding	1 Thru 6
32 92 23	Sodding	1 Thru 3
32 93 33	Shrubs	1 Thru 7
33 05 13	Manholes and Structures	1 Thru 4
33 40 00	Storm Drainage Piping	1 Thru 6
34 40 00	Traffic Control	1 Thru 3

INTRODUCTION

This document provides for the general technical specifications for constructing drainage projects to be constructed and owned by the City of Peachtree City (City). It is intended that these specifications will be utilized by private construction firms / companies that have secured a contract with the City to construct new or replace existing drainage systems. It should be noted that these specifications assume that Peachtree City personnel will manage the project in-lieu of the Engineer of Record (Engineer) for the project. As such, the Contractor should coordinate all activities and requests for information or direction to the Peachtree City Project Manager. It is the responsibility of the Peachtree City Project Manager to communicate with the Engineer and consult with Engineer on matters that will affect the design or function of the project. As such, communications between the Contractor and Engineer shall have no standing for the purposes of the Contract between the City and the Contractor.

END OF SECTION

SECTION 02 41 00

DEMOLITION

PART 1 GENERAL

1.01 RELATED DOCUMENTS

Construction Plans and general provisions of Contract, including General and Supplementary Conditions and Division 1 Specification sections, apply to work of this section.

1.02 DESCRIPTION OF WORK

A. Extent of demolition work is indicated on the Construction Plans.

B. Demolition includes all operations necessary for demolition of the existing structures, foundations and utilities as shown.

C. Remove debris, rubbish and other materials resulting from demolition operations from the site. Transport and legally dispose of materials off site.

1.03 SUBMITTALS

A. Schedule: Submit schedule indicating proposed methods and sequence of operations for demolition work to Owner's Representative for review prior to commencement of work. Include coordination for shut-off, capping, and continuation of utility services as required, together with details for dust and noise control protection. The procedures shall provide for safe conduct of the work, careful removal and disposition of materials specified to be salvaged, protection of property which is to remain undisturbed, coordination with other work in progress, and timely disconnection of utility services. The submittal shall include a detailed description of the methods and equipment to be used for each operation, and the sequence of operation.

B. If the Peachtree City or the Public shall continue to utilize the work site during construction either fully or partially, provide a detailed sequence of demolition and removal work to ensure uninterrupted on-site operations. For example, if a road is to be kept open for access to homes and businesses during construction, the Contractor shall provide a plan for ensuring continuous access during various phases of the project.

C. Coordinate with the Project Manager continuing occupation of portions of existing building/site, with City's partial occupancy of completed new addition/site.

1.04 JOB CONDITIONS

A. Occupancy: Peachtree City, Private Property Owners, Tenants, Utilities, or Others will be continuously occupying areas of the building/site immediately adjacent to areas of selective demolition. Conduct selective demolition work in manner that will minimize need for disruption normal operations. Provide minimum of 72 hours advance notice to the Project Manager and affected Individuals of demolition activities which will significantly or adversely impact normal operations.

B. Condition of Structures: Neither Peachtree City or the Owners of Private Property assume responsibility for actual condition of items or structures to be demolished.

C. Conditions existing at time of commencement of contract will be maintained by Peachtree City insofar as practicable. However, variations within structure may occur due to removal and salvage operations prior to start of selective demolition work by either the City or the Owners of Private Property on or immediately adjacent to the work area.

D. Partial Demolition and Removal: Items indicated to be removed but of salvable value to Contractor may be removed from project as work progresses. Transport salvaged items from site as they are removed.

E. Storage or sale of removed items on site will not be permitted.

F. Protection: Provide temporary barricades and other forms of protection as required to protect City's personnel and general public from injury due to selective demolition work.

G. Provide protective measures as required to provide free and safe passage of City's personnel and general public to and from occupied portions of project.

H. Erect temporary covered passageways as required by authorities having jurisdiction.

I. Provide interior and exterior shoring, bracing, or support to prevent movement, settlement, or collapse of structure or element to be demolished, and adjacent areas, facilities, or work to remain.

J. Protect from damage existing finish work that is to remain in place and becomes exposed during demolition operations.

K. Remove protections at completion of work.

L. Damages: Promptly repair damages caused to adjacent facilities by demolition work at no cost to Peachtree City, Private Property Owners, Tenants, Utilities, or Others unless otherwise provided for in the contract.

M. Traffic: Conduct selective demolition operations and debris removal in a manner to ensure minimum interference with roads, streets, walks, and other adjacent occupied or used facilities.

N. Do not close, block or otherwise obstruct streets, walks or other occupied or used

facilities without written permission from authorities (i.e. City of Peachtree City, Georgia Department of Transportation, or Private Property Owner) having jurisdiction. Provide alternate routes around closed or obstructed traffic ways if required by governing regulations.

O. Explosives: Use of explosives will not be permitted unless otherwise noted.

P. Utility Services: Maintain existing utilities indicated to remain, keep in service, and protect against damage during demolition operations. Contractor is solely responsible for costs associated with damage to utilities including but not limited to replacement, fines, administrative costs, legal fees, etc.

Q. Do not interrupt existing utilities serving occupied or used facilities, except when authorized in writing by authorities having jurisdiction. Provide temporary services during interruptions to existing utilities, as acceptable to governing authorities.

R. Environmental Controls: Use water sprinkling, temporary enclosures, and other suitable methods to limit dust and dirt rising and scattering in air to lowest practical level. Comply with governing regulations pertaining to environmental protection.

S. Do not use water when it may create hazardous or objectionable conditions such as ice, flooding, and pollution.

T. NESHAP Compliance: The Contractor is responsible for being aware of and complying with the National Emission Standard for Hazardous Air Pollutants (NESHAP) Section 112 of the Federal Clean Air Act regarding asbestos.

PART 2 PRODUCTS (NOT APPLICABLE)

PART 3 EXECUTION

3.01 INSPECTION

Prior to commencement of demolition work, inspect areas in which work will be performed. Photograph existing conditions to structure surfaces, equipment or to surrounding properties which could be misconstrued as damage resulting from selective demolition work; file with Owner's Representative prior to starting work. Contractor shall provide a copy of all photographs to the Peachtree City Project Manager prior to commencement of demolition work.

3.02 PREPARATION

A. Provide interior and exterior shoring, bracing, or support to prevent movement, settlement or collapse of structures to be demolished and adjacent facilities to remain.

B. Cease operations and notify the City's Representative immediately if safety of structure appears to be endangered. Take precautions to support structure until determination is made for continuing operations.

C. Locate, identify, stub off and disconnect utility services that are not indicated to remain.

D. Provide by-pass connections as necessary to maintain continuity of service to occupied areas of project. Provide minimum of 72 hours advance notice to Peachtree City, Private Property Owners, Tenants, Utilities, and / or Others affected by the project if shut-down of service is necessary during change-over.

3.03 DEMOLITION

A. Perform selective demolition work in a systematic manner. Use such methods as required to complete work indicated on the Plans in accordance with demolition schedule and governing regulations.

B. Demolish concrete and masonry in small sections. Cut concrete and masonry at junctures with construction to remain using power-driven masonry saw or hand tools; do not use power-driven impact tools.

C. All existing structures shall be completely removed where denoted on the Plans. All foundations and slabs shall be broken up and removed from the site. Sidewalks, curbs, gutters, streets and street light bases shall be completely removed. It is not anticipated that piling will be encountered; however, where piling is encountered they shall be removed to a point three feet below existing ground or proposed subgrade whichever is lower.

D. Burning of debris on or adjacent to the project area is not allowed.

E. Demolish foundation walls to a depth of not less than 12" below existing ground surface. Demolish and remove below-grade wood or metal construction. Break up below-grade concrete slabs.

F. Completely fill below-grade areas and voids resulting from demolition work. Provide fill consisting of approved earth, gravel or sand, free of trash and debris, stones over 6" diameter, roots or other organic matter.

G. If anticipated mechanical, electrical or structural elements which conflict with intended function or design are encountered, investigate and measure both nature and extent of the conflict. Submit report to City's Representative in written, accurate detail. Pending receipt of directive form City's Representative rearrange selective demolition schedule as necessary to continue overall job progress without delay.

3.04 SALVAGE MATERIALS

A. Salvage Items: Where indicated on the Plans as "Salvage-Deliver to City or Property Owner", carefully remove indicated items, clean, store and turn over to

City or Property Owner and obtain receipt.

B. Historic artifacts, including cornerstones and their contents, commemorative plaques and tables, antiques, and other articles of historic significance remain the property of the City or Property Owner. Notify City's Representative if such items are encountered and obtain acceptance regarding method of removal and salvage for City or Property Owner.

3.05 DISPOSAL OF DEMOLISHED MATERIALS

A. Remove debris, rubbish and other materials resulting from demolition operations from the site. Transport and legally dispose of materials off site.

B. If hazardous materials are encountered during demolition operations, comply with applicable regulations, laws, and ordinances concerning removal, handling and protection against exposure or environmental pollution.

3.06 DEMOLITION AND REPAIR

A. Upon completion of demolition work, remove tools, equipment and demolished materials from site. Remove protections and leave interior areas broom clean.

B. Repair demolition performed in excess of that required. Return structures and surfaces to remain to condition existing prior to commencement of selective demolition work. Repair adjacent construction or surfaces soiled or damaged by selective demolition work.

END OF SECTION

SECTION 03 33 00

CAST IN PLACE CONCRETE GENERAL APPLICATIONS

PART 1 GENERAL

1.01 SECTION INCLUDES

A. Concrete formwork.

B. Concrete building frame members.

C. Concrete for composite floor construction.

D. Elevated concrete slabs.

E. Floors and slabs on grade.

F. Concrete shear walls, elevator shaft walls, and foundation walls.

G. Concrete foundations and anchor bolts for pre-engineered building.

H. Concrete foundations for water storage tank(s).

I. Concrete reinforcement.

J. Joint devices associated with concrete work.

K. Miscellaneous concrete elements, including equipment pads, light pole bases, flagpole bases, thrust blocks, and manholes.

L. Concrete curing.

1.02 REFERENCES

A. ACI 211.1 - Standard Practice for Selecting Proportions for Normal, Heavyweight, and Mass Concrete; American Concrete Institute International; 1991 (Reapproved 1997).

B. ACI 211.2 - Standard Practice for Selecting Proportions for Structural Lightweight Concrete; American Concrete Institute International; 1998.

C. ACI 301 - Specifications for Structural Concrete for Buildings; American Concrete Institute International; 1996.

D. ACI 302.1R - Guide for Concrete Floor and Slab Construction; American Concrete Institute International; 1996.

E. ACI 304R - Guide for Measuring, Mixing, Transporting, and Placing Concrete; American Concrete Institute International; 1989 (Reapproved 1997).

F. ACI 305R - Hot Weather Concreting; American Concrete Institute International; 1991.

G. ACI 306R - Cold Weather Concreting; American Concrete Institute International;

1988.

H. ACI 308 - Standard Practice for Curing Concrete; American Concrete Institute International; 1992 (Reapproved 1997).

I. ACI 318 - Building Code Requirements for Reinforced Concrete and Commentary; American Concrete Institute International; 1999.

J. AC1350R – Environmental Engineering Concrete Structures; American Concrete Institute International; 1989.

K. ASTM A 185 - Standard Specification for Steel Welded Wire Fabric, Plain, for Concrete Reinforcement; 1997.

L. ASTM A 497 - Standard Specification for Steel Welded Wire fabric, Deformed, for Concrete Reinforcement; 1997.

M. ASTM A 615/A 615M - Standard Specification for Deformed and Plain Billet-Steel Bars for Concrete Reinforcement; 1996a.

N. ASTM A 767/A 767M - Standard Specification for Zinc-Coated (Galvanized) Steel Bars for Concrete Reinforcement; 1997.

O. ASTM A 775/A 775M - Standard Specification for Epoxy-Coated Reinforcing Steel Bars; 1997.

P. ASTM A 884/A 884M - Standard Specification for Epoxy-Coated Steel Wire and Welded Wire Fabric for Reinforcement; 1996a.

Q. ASTM C 33 - Standard Specification for Concrete Aggregates; 1999a.

R. ASTM C 39/C 39M - Standard Test Method for Compressive Strength of Cylindrical Concrete Specimens; 1999.

S. ASTM C 94/C 94M - Standard Specification for Ready-Mixed Concrete; 2000.

T. ASTM C 150 - Standard Specification for Portland Cement; 1999a.

U. ASTM C 171 - Standard Specification for Sheet Materials for Curing Concrete; 1997a.

V. ASTM C 173 - Standard Test Method for Air Content of Freshly Mixed Concrete by the Volumetric Method; 1994a.

W. ASTM C 260 - Standard Specification for Air-Entraining Admixtures for Concrete; 1998.

X. ASTM C 309 - Standard Specification for Liquid Membrane-Forming Compounds for Curing Concrete; 1998a.

Y. ASTM C 330 - Standard Specification for Lightweight Aggregates for Structural Concrete; 1999.

Z. ASTM C 494/C 494M - Standard Specification for Chemical Admixtures for Concrete; 1999a.

AA. ASTM C 618 - Standard Specification for Coal Fly Ash and Raw or Calcined Natural Pozzolan for Use as a Mineral Admixture in Concrete; 1999.

AB. ASTM C 685 - Standard Specification for Concrete Made by Volumetric Batching and Continuous Mixing; 1998a.

AC. ASTM C 881 - Standard Specification for Epoxy-Resin-Base Bonding Systems for Concrete; 1999.

AD. ASTM C 1059 - Standard Specification for Latex Agents for Bonding Fresh to Hardened Concrete; 1999.

AE. ASTM C 1107 - Standard Specification for Packaged Dry, Hydraulic-Cement Grout (Nonshrink); 1999.

AF. ASTM D 994 - Standard Specification for Preformed Expansion Joint Filler for Concrete (Bituminous Type); 1998.

AG. ASTM D 1751 - Standard Specification for Preformed Expansion Joint Filler for Concrete Paving and Structural Construction (Nonextruding and Resilient Bituminous Types); 1999.

AH. ASTM D 3963/D 3963M - Standard Specification for Fabrication and Job-Site Handling of Epoxy Coated Reinforcing Steel Bars; 1999.

AI. ASTM E 1155 - Standard Test Method for Determining F(F) Floor Flatness and F(L) Floor Levelness Numbers; 1996.

1.03 SUBMITTALS

A. See Section 01 33 00 Submittals, for submittal procedures.

B. Product Data: Submit manufacturers' data on manufactured products.

C. Samples: Submit two, 12 inch long samples of waterstops and construction joint devices.

D. Manufacturer's Installation Instructions: Indicate installation procedures and interface required with adjacent construction for concrete accessories.

E. Project Record Documents: Accurately record actual locations of embedded utilities and components that will be concealed from view upon completion of concrete work.

1.04 QUALITY ASSURANCE

A. Perform work of this section in accordance with ACI 301 and ACI 318.

1. Maintain one copy of each document on site.

B. Acquire cement from same source and aggregate from same source for entire project.

C. Follow recommendations of ACI 305R when concreting during hot weather.

D. Follow recommendations of ACI 306R when concreting during cold weather.

PART 2 PRODUCTS

2.01` FORMWORK

A. Form Materials: Contractor's choice of standard products with sufficient strength to withstand hydrostatic head without distortion in excess of permitted tolerances.

1. Form Facing for Exposed Finish Concrete: Contractors choice of materials that will provide smooth, stain-free final appearance.
2. Form Facing for Exposed Finish Concrete: Steel.
3. Form Coating: Release agent that will not adversely affect concrete or interfere with application of coatings.
4. Form Ties: Cone snap type that will leave no metal within 1-1/2 inches of concrete surface. Form ties shall contain a water stop washer.

2.02 REINFORCEMENT

A. Reinforcing Steel: ASTM A 615/A 615M Grade 60 (420).

1. Deformed billet-steel bars.
2. Unfinished.
3. Galvanized in accordance with ASTM A 767/A 767M, Class I.
4. Epoxy coated in accordance with ASTM A 775/A 775M.

B. Welded Steel Wire Fabric: ASTM A 185, plain type.

1. Coiled Rolls.
2. Mesh Size and Wire Gage: As indicated on drawings.

C. Reinforcement Accessories:

1. Tie Wire: Annealed, minimum 16 gage (1.5 mm).
2. Chairs, Bolsters, Bar Supports, Spacers: Sized and shaped for adequate support of reinforcement during concrete placement.
3. Provide stainless steel, galvanized, plastic, or plastic coated steel components for placement within 1-1/2 inches (38 mm) of weathering surfaces.

2.03 CONCRETE MATERIALS

A. Cement: ASTM C 150, Type I, II or III - Normal Portland type.

B. Fine and Coarse Aggregates: ASTM C 33.

C. Lightweight Aggregate: ASTM C 330.

D. Fly Ash: ASTM C 618, Class C or F.

E. Calcined Pozzolan: ASTM C 618, Class N.

F. Silica Fume: ACI 211.1

G. Water: Clean and not detrimental to concrete.

H. Fiber Reinforcement: Synthetic fiber shown to have long-term resistance to deterioration when exposed to moisture and alkalis; 1/2 inch (12 mm) length.

2.04 ADMIXTURES

A. Air Entrainment Admixture: ASTM C 260

B. Chemical Admixtures: ASTM C 494/C 494M, Type A - Water Reducing, Type C - Accelerating, and Type G - Water Reducing, High Range and Retarding.

1. Do not use chemicals that will result in soluble chloride ions in excess of 0.1 percent by weight of cement.

2.05 CONCRETE ACCESSORIES

A. Reglets: Formed steel sheet, galvanized, with temporary filler to prevent concrete intrusion during placement.

B. Bonding Agent: ASTM C 1059, Type II acrylic non-redispersable type.

C. Epoxy Bonding System: ASTM C 881, type as required by project conditions.

D. Vapor Barrier: 6 mil thick clear polyethylene film, type recommended for below grade application.

E. Chemical Hardener: Fluosilicate solution designed for densification of cured concrete slabs.

F. Non-Shrink Grout: ASTM C 1107; premixed compound consisting of non-metallic aggregate, cement, water reducing and plasticizing agents.

1. Minimum Compressive Strength at 48 Hours: 2,400 psi (17 MPa).

2. Minimum Compressive Strength at 28 Days: 7,000 psi (48 MPa).

G. Curing Materials: Comply with requirements of AC1308.

H. Moisture-Retaining Cover: ASTM C 171; regular curing paper, white curing paper, clear polyethylene, white polyethylene, or white burlap-polyethylene sheet.

I. Liquid Curing Compound: ASTM C 309, Type 1, clear or translucent, non-staining.

2.06 JOINT DEVICES AND MATERIALS

A. Waterstops: PVC, bulb-type, 6 inches minimum width, 3/8” nominal thickness, continuous.

1. Lapped joints are not permitted.

2. Product: Greenstreak 705.

3. Alternative waterstop system: modified chloroprene rubber hydrophilic waterstop. Product greenstreak CJ-0725-3K.

B. Joint Filler: Nonextruding, resilient asphalt impregnated fiberboard or felt, complying with ASTM D 1751, 1/4 inch thick and 4 inches deep; tongue and groove profile.

C. Joint Filler: Compressible asphalt mastic with felt facers, complying with ASTM D 994, 1/4 inch thick and 4 inches deep.

D. Construction Joint Devices: Integral galvanized steel, formed to tongue and groove profile, with removable top strip exposing sealant trough, knockout holes spaced at 6 inches, ribbed steel spikes with tongue to fit top screed edge.

2.07 CONCRETE MIX DESIGN

A. Proportioning Normal Weight Concrete: Comply with ACI 211.1 recommendations.

B. Concrete Strength: Establish required average strength for each type of concrete on the basis of field experience or trial mixtures, as specified in ACI 301.

1. For trial mixtures method, employ independent testing agency acceptable to for preparing and reporting proposed mix designs.

C. Admixtures: Add acceptable admixtures as recommended in ACI 211.1 and at rates recommended by manufacturer.

D. Fiber Reinforcement: Add to mix at rate of 1.5 pounds per cubic yard (0.89 kg per cubic meter), or as recommended by manufacturer for specific project conditions.

E. Normal Weight Concrete:

1. Compressive Strength, when tested in accordance with ASTM C 39/C 39M at 28 days: 4000 psi.

2. Fly Ash Content: Maximum 15 percent of cementitious materials by weight.

3. Calcined Pozzolan Content: Maximum 10 percent of cementitious materials by weight.

4. Silica Fume Content: Maximum 5 percent of cementitious materials by weight.

5. Cement Content: Minimum 517 lb per cubic yard.

6. Water-Cement Ratio: Maximum 40 percent by weight.

7. Total Air Content: 4 percent, per ASTM C 173.

8. Maximum Slump: 4 inches.

9. Maximum Aggregate Size: 1 1/2 inch.

2.08 MIXING

A. On Project Site: Mix in drum type batch mixer, complying with ASTM C 685. Mix each batch not less than 1-1/2 minutes and not more than 5 minutes.

B. Transit Mixers: Comply with ASTM C 94/C 94M.

2.09 CONCRETE PROPERTIES FOR APPLICABLE COMPRESSIVE STRENGTHS

28 Day Compressive Strength (fc, psi)	Maximum Water-Cement Ratio By Weight (lb/lb)	Minimum Cement Content (lbs/cubic yard)	Location
5000	0.40*	611	Prestressed Members
4000	0.45	564	Structural Items
3000	0.50	470	Sidewalks, Concrete Fill

*The optimum water-cement ratio for mix designs in excess of 4000 psi 28 day compressive strength shall be determined by various mix designs but not to exceed 0.40.

2.10 SLUMP LIMITS

A. Concrete, when placed, shall have a slump within the following limits as measured in accordance with ASTM C143:

1. Walls, beams, columns 1"-3"
2. Footings, caissons 2"-4"
3. Pavement, slabs, sidewalks 2"-4"

PART 3 EXECUTION

3.01 EXAMINATION

Verify lines, levels, and dimensions before proceeding with work of this section.

3.02 PREPARATION

A. Formwork: Comply with requirements of ACI 301. Design and fabricate forms to support all applied loads until concrete is cured, and for easy removal without damage to concrete.

B. Verify that forms are clean and free of rust before applying release agent.

C. Coordinate placement of joint devices with erection of concrete formwork and placement of form accessories.

D. Prepare previously placed concrete by cleaning with steel brush and applying bonding agent in accordance with manufacturer's instructions.

E. In locations where new concrete is doweled to existing work, drill holes in existing concrete, insert steel dowels and pack solid with non-shrink grout.

F. Install vapor barrier under interior slabs on grade. Lap joints minimum 6 inches (150 mm) and seal watertight by taping edges and ends. Cover with sand to depth shown on drawings.

3.03 INSTALLATION (OF REINFORCEMENTS)

A. Fabricate and handle epoxy-coated reinforcing in accordance with ASTM D 3963/D 3963M.

B. Comply with requirements of ACI 301. Clean reinforcement of loose rust and mill scale, and accurately position, support, and secure in place to achieve not less than minimum concrete coverage required for protection.

C. Install wire fabric in maximum possible lengths, and offset end laps in both directions. Splice laps with tie wire.

D. Verify that anchors, seats, plates, reinforcement and other items to be cast into concrete are accurately placed, positioned securely, and will not interfere with concrete placement.

3.04 FIELD QUALITY CONTROL

A. An independent testing agency will perform field quality control tests, as specified in Section 01 40 00 Quality Requirements.

B. Provide free access to concrete operations at project site and cooperate with appointed firm.

C. Submit proposed mix design of each class of concrete to inspection and testing firm for review prior to commencement of concrete operations.

D. Tests of concrete and concrete materials may be performed at any time to ensure conformance with specified requirements.

E. Compressive Strength Tests: ASTM C 39/C 39M. For each test, mold and cure three concrete test cylinders. Obtain test samples for every 100 cu yd (76 cu m) or less of each class of concrete placed.

F. Take one additional set of test cylinders during cold weather concreting, cured on job site under same conditions as concrete it represents.

G. Perform one slump test for each set of test cylinders taken.

3.05 PLACING CONCRETE

A. Place concrete in accordance with ACI 304R.

B. Place concrete for floor slabs in accordance with ACI 302.1R.

C. Notify not less than 24 hours prior to commencement of placement operations.

D. Ensure reinforcement, inserts, waterstops, embedded parts, and formed construction joint devices will not be disturbed during concrete placement.

E. Repair vapor barrier damaged during placement of concrete reinforcing. Repair with vapor barrier material; lap over damaged areas minimum 6 inches and seal watertight.

F. Separate slabs on grade from vertical surfaces with joint filler.

G. Place joint filler in floor slab pattern placement sequence. Set top to required elevations. Secure to resist movement by wet concrete.

H. Extend joint filler from bottom of slab to within 1/2 inch (13 mm) of finished slab surface.

I. Install joint devices in accordance with manufacturer's instructions.

J. Install construction joint devices in coordination with floor slab pattern placement sequence. Set top to required elevations. Secure to resist movement by wet concrete.

K. Install joint device anchors for expansion joint assemblies as specified. Maintain correct position to allow joint cover to be flush with floor and wall finish.

L. Apply sealants in joint devices in accordance with Manufacturer.

M. Maintain records of concrete placement. Record date, location, quantity, air temperature, and test samples taken.

N. Place concrete continuously between predetermined expansion, control, and construction joints.

O. Do not interrupt successive placement; do not permit cold joints to occur.

P. Place floor slabs in checkerboard or saw cut pattern indicated.

Q. Saw cut joints within 24 hours after placing. Use 3/16 inch thick blade, cut into 1/4 depth of slab thickness.

R. Screed floors level, maintaining surface flatness of maximum 1/4 inch in 10 ft.

3.06 CONCRETE FINISHING

A. Repair surface defects, including tie holes, immediately after removing formwork.

B. Unexposed Form Finish: Rub down or chip off fins or other raised areas 1/4 inch or more in height.

C. Exposed Form Finish: Rub down or chip off and smooth fins or other raised areas 1/4 inch or more in height. Provide finish as follows:

1. Smooth Rubbed Finish: Wet concrete and rub with carborundum brick or other abrasive, not more than 24 hours after form removal.

2. Grout Cleaned Finish: Wet areas to be cleaned and apply grout mixture by brush or spray; scrub immediately to remove excess grout. After drying, rub vigorously with clean burlap, and keep moist for 36 hours.

3. Cork Floated Finish: Immediately after form removal, apply grout with trowel or firm rubber float; compress grout with low-speed grinder, and apply final texture with cork float.

D. Concrete Slabs: Finish to requirements of ACI 302.1R, and as follows:

1. Wood float surfaces that will receive quarry tile, ceramic tile, and terrazzo with full bed setting system.

2. Steel trowel surfaces that will receive carpeting, resilient flooring, seamless flooring, thin set quarry tile, and thin set ceramic tile.

3. Steel trowel surfaces that will be left exposed.

a. Chemical Hardener: After slab has cured, apply water-diluted hardener in three coats per manufacturer's instructions, allowing 24 hours between coats.

E. In areas with floor drains, maintain floor elevation at walls; pitch surfaces uniformly to drains at 1:100 nominal.

3.07 CURING AND PROTECTION

A. Comply with requirements of ACI 308. Immediately after placement, protect concrete from premature drying, excessively hot or cold temperatures, rain and flowing water, and mechanical injury.

B. Maintain concrete with minimal moisture loss at relatively constant temperature for period necessary for hydration of cement and hardening of concrete.

1. Normal concrete: Not less than 7 days.

2. High early strength concrete: Not less than 4 days.

C. Formed Surfaces: Cure by moist curing with forms in place for full curing period.

D. After forms are removed, an approved membrane forming curing compound, to seal water in the concrete, shall be applied to all concrete except surfaces which are to receive future concrete or mortar necessary for hydration of cement and hardening of concrete.

1. Normal concrete: Not less than 7 days.

2. High early strength concrete: Not less than 4 days.

E. Surfaces Not in Contact with Forms:

1. Start initial curing as soon as free water has disappeared and before surface is dry. Keep continuously moist for not less than three days by water ponding, water-saturated sand, water-fog spray, or saturated burlap.

2. Begin final curing after initial curing but before surface is dry.

a. Moisture-retaining cover: Seal in place with waterproof tape or adhesive.

b. Curing compound: Apply in two coats at right angles, using application rate recommended by manufacturer.

3.08 WATER TIGHTNESS

A. All concrete structures for holding and transporting water and wastewater, and pits below ground level, shall be watertight; a drop in the water level of more than ¼ inch within 24 hours will not be permitted when waterholding and transporting structures, and pits below ground level, are filled.

B. All exposed surfaces of water holding and transporting structures, and interiors of pits below ground water level, shall be free from visible damp spots and seepages before acceptance.

C. The Contractor shall fill and test structures prior to backfilling, as directed by the Peachtree City Project Manager.

3.09 CONTROL JOINTS

A. Construction Joints: Shall be formed using galvanized metal keyway or job-built wood forms with keyway.

B. Sawed Joints: Shall be sawed within 24-hours of placing the concrete.

C. Expansion Joints: Shall be located where new concrete is to be placed up to existing concrete and as shown on the drawings or as directed by the Peachtree City Project Manager.

D. General: Joints shall be located so that the maximum area between shall not exceed 600 square feet. Length to width ratios shall not exceed 2 to 1. Refer to the drawings for a specific joint pattern.

3.10 DEFECTIVE WORK

Concrete not conforming with the plans and specifications, not formed as shown on the plans, has a defective surface, or lacks the required strength shall be removed from the job site at the contractor's expense or repaired as directed by the Peachtree City Project Manager.

END OF SECTION

SECTION 31 10 00

SITE CLEARING

PART 1 GENERAL

1.01 SCOPE

This Section describes materials and equipment to be utilized and requirements for their use in preparing the work site for construction. The Contractor shall furnish all materials, equipment and labor necessary to complete the work. The contractor is required to contact the **Utilities Protection Center, Inc.** in the **State of Georgia call 811** prior to any excavation or construction.

1.02 REFERENCES

Georgia Manual for Erosion and Sedimentation Control, current edition

1.03 QUALITY ASSURANCE

A. Comply with applicable codes, ordinances, rules, regulations and laws of local, municipal, state or federal authorities having jurisdiction.

B. Layout work shall be done under supervision of a Civil Engineer or Registered Land Surveyor, registered in Georgia.

C. Transit and measuring devices shall be calibrated to layout site and construction work.

1.04 SITE CONDITIONS

The area to be cleared and grubbed is shown schematically on the Drawings or specified below.

PART 2 PRODUCTS

2.01 EQUIPMENT

The Contractor shall furnish equipment of the type normally used in clearing and grubbing operations including, but not limited to, tractors, dozers, chippers, trucks, loaders, and root rakes.

PART 3 EXECUTION

3.01 PREPARATION

A. Protect and maintain all benchmarks, monuments and reference points. Replace if disturbed or destroyed. If found at variance with the Drawings, notify the Peachtree City Project Manager before proceeding with layout work.

B. Install erosion and sedimentation control structures as shown on the Drawings.

C. Protect all trees, vegetation, structures, utilities, and buildings not designated for removal for demolition.

3.02 TOPSOIL STRIPPING AND STOCKPILING

A. Topsoil (top 6" – 8" of material to be confirmed by based on observations of Peachtree City Project Manager) is to be removed from all cleared and grubbed areas and placed in designated stockpile areas as shown on the plans. If a stockpile area is not provided in the plans, then an area shall be proposed by the Contractor and approved by the Peachtree City Project Manager). The Contractor shall then grade the entire work site to conform, in general, to the finish elevations shown on the Plans.

B. Shape topsoil stockpiles to drain without ponding water.

C. Where trees are indicated to remain, stop topsoil stripping at drip line.

3.03 TREE PROTECTION

A. Construct tree protection barricades, minimum 3'-0" high around individual trees and groups of trees designated to remain. Construct barricades at drip line.

B. Protect tree root systems from damage due to deleterious materials caused by run-off or spillage during mixing, use or discarding of construction materials or drainage from stored materials. Protect root systems form compaction, flooding, erosion or excessive wetting.

3.04 EXCAVATION AROUND TREES TO REMAIN

A. Where trenching for utilities is required within drip line, hand dig under or around roots. Cut no lateral roots or tap roots; cut smaller roots which interfere with new construction.

B. Where excavation for new construction is required within drip line of trees, hand excavate to minimize damage to root systems. Use narrow tine spading forks and comb soil to expose roots. Relocate roots in backfill areas. If large, main lateral roots are encountered, expose beyond excavation limits, bend and relocate without breaking. If encountered immediately adjacent to location of new construction and

relocation is not practical, cut roots approximately 3" back from new construction.

C. Allow no exposed roots to dry out before permanent backfill is places; provide temporary earth cover, or pack with peat moss and wrap with burlap. Water and maintain in moist condition and temporarily support and protect from damage until permanently relocated and covered with backfill.

D. Prune braches in accord with standard horticultural practice to balance loss to root system caused by damage or cutting of root system. Engage qualified arborist approved by the Peachtree City Project Manager to prune branches.

3.05 REPAIR FOR DAMAGED TREES

A. Engage a qualified arborist approved by the Peachtree City Project Manager to perform tree repair work.

B. Make repairs promptly after damage occurs to prevent progressive deterioration of damaged trees.

C. Remove dead trees and damaged trees in construction area which are determined by the tree arborist to be incapable of restoration to normal growth pattern.

3.06 CLEARING AND GRUBBING

A. Clear and grub each area before excavating. All trees, herbaceous growth and stumps are to be chipped for mulch. Mulch will be stockpiled in the areas designated on the Plans or used for erosion control as required. All other debris is to be removed to an approved landfill.

B. Materials to be removed from the project site include, but are not limited to trash, organic matter, construction waste materials (i.e. paving, concrete miscellaneous structures, houses), debris and abandoned utilities.

C. Grubbing shall consist of completely removing roots, stumps, trash and other debris from all graded areas so that topsoil is free of roots and debris. Topsoil is to be left sufficiently clean so that further picking and raking will not be required.

D. All foundations and planking embedded in the ground shall be removed and disposed. Butts of utility poles shall be removed.

E. Landscaping features shall include, but not limited to, fences, cultivated trees and shrubbery, property corners, man made improvements and signs. The Contractor shall take extreme care in moving landscape features and promptly re-establishing these features. Alternatively, the Contractor may propose to replace the features. This alternative will only be allowed if the Peachtree City Project Manager and Private Property Owner approve such a substitution in writing prior to removal.

F. Surface rocks and boulders shall be grubbed from the soil and removed from the site if not suitable as rip rap.

G. The entire construction area shall be grubbed by heavy tractors with root rakes. Raking shall generally proceed along the contour rather than up and down slopes so as to inhibit soil erosion.

H. Where the tree limbs interfere with utility wires, or where the trees to be felled are in close proximity to utility wires, the tree shall be taken down in sections to eliminate the possibility of damage to the utility.

I. Any work pertaining to utility poles shall comply with the requirements of the appropriate utility.

J. All fences adjoining any excavation or embankment that, in the Contractor's opinion, may be damaged or buried, shall be carefully removed, stored and replaced. Any fencing that, in the Peachtree City Project Manager's opinion, is significantly damaged shall be replaced with new fence material.

K. Stumps and roots shall be grubbed and removed to a depth not less than two feet below grade. All holes or cavities which extend below the subgrade elevation of the proposed work shall be filled with crushed rock or other suitable material, compacted to the same density as the surrounding material.

L. The Contractor shall exercise special precautions for the protection and preservation of trees, cultivated shrubs, sod, fences, etc. situated within the limits of the construction area but not directly within excavation and/or fill limits. The Contractor shall be held liable for any damage the Contractor's operations have inflicted on such property.

M. The Contractor shall be responsible for all damages to existing improvements resulting from Contractor's operations.

3.07 DISPOSAL OF DEBRIS

A. The debris resulting from the clearing and grubbing operation shall be removed from the site and disposed of in accordance with all requirements of federal, state, county and municipal regulations. No debris of any kind shall be deposited in any stream or body of water, or in any street or alley. No debris shall be deposited upon any private property unless provided via a written authorization from the property owner and provided to the Peachtree City Project Manager. In no case shall any material or debris be left on the Project, shoved onto abutting private properties or buried on the Project.

B. No burning shall be allowed of debris generated by the project under any circumstances unless allowed in writing by the Peachtree City Project Manager. If approved in writing by the Peachtree City Project Manager and when authorized by the proper authorities, the Contractor may dispose of such debris by burning on the Project site provided all requirements set forth by the governing authorities are met. The authorization to burn shall not relieve the Contractor in any way from damages which result from the Contractor's operations. On easements through private property, the Contractor shall not burn on the site unless written consent is also secured from the property owner, in addition to authorization from the proper authorities.

C. Tub Grinders shall not be allowed on any Peachtree City project for which these specifications govern unless allowed in writing by the Peachtree City Project Manager. Chippers which discharge directly to a truck with a roof and sides to prevent material from being discharged in an uncontrolled manner will be allowed. However, the contractor is cautioned to ensure that debris from the chipper shall not pose a danger to the public or private property. If a forestry head will be utilized on a tractor or other piece of equipment, then the Contractor shall notify the Peachtree City Project Manager at least 48 hours in advance of the work and present a plan for use of the equipment and secure approval.

END OF SECTION

SECTION 31 14 14

TOPSOIL

PART 1 GENERAL

1.01 SCOPE

A. Topsoil for planting shall consist of a rich, friable soil conforming to the requirements and provisions set out in these Specifications, or an approved by the Peachtree City Project Manager and obtained from locations indicated on the Drawings. Topsoil shall be placed at the locations indicated on the Drawings, set out in the Specifications or as directed by the Peachtree City Project Manager and in conformity with the provisions and requirements set out in the Specifications.

B. Suitable topsoil which has been stripped off of excavation and embankment areas shall be stockpiled as directed by the Peachtree City Project Manager and later used before additional topsoil is hauled to the site. Unsuitable material shall not be included in these stockpiles and shall be wasted as directed by the Peachtree City Project Manager.

PART 2 PRODUCTS

2.01 MATERIALS

A. Topsoil planting shall be a rich, friable loam containing a large amount of humus and shall be original surface sandy loam, topsoil of good, rich, uniform quality, free from any material such as hard clods, stiff clay, hardpan, partially disintegrated stone, pebbles larger than 1/2-inch in diameter, lime, cement, bricks, ashes, cinders, slag, concrete, bitumen or its residue, boards, sticks, chips or other undesirable material harmful or unnecessary to plant growth. Topsoil shall be reasonable free from perennial weeds and shall not contain objectionable plant material, toxic amounts of either acid or alkaline elements or vegetable debris undesirable or harmful to plant life.

B. Topsoil shall be natural topsoil without admixture of subsoil material, and shall be classified as a loam, silt loam, clay loam or a combination thereof. Topsoil shall contain not less than five percent nor more than 20 percent, by weight, of organic mater as determined by loss or ignition of oven-dried samples. The ignition test shall be performed on samples which have been thoroughly oven-dried to constant weight at a temperature of 221 degrees F.

C. Topsoil shall be secured from areas from which topsoil has not been previously removed, either by erosion or mechanical methods. Topsoil shall not be removed to a depth in excess of the depth approved by the Peachtree City Project Manager.

D. The area or areas from which topsoil is secured shall possess such uniformity of soil depth, color, texture, drainage and other characteristics as to offer assurance that, when removed in commercial quantities, the product will be homogeneous in nature and will conform to the requirements of these Specifications, or as required by the Peachtree City Project Manager.

E. Topsoil may be secured, if approved by the Peachtree City Project Manager, from areas which are, or have been, in cultivation within the past five years, which are producing or have produced fair or good yields of staple farm or truck crops without unusual fertilization, or topsoil may be secured from areas supplied with good normal drainage which is arable or suitable for cultivation.

PART 3 EXECUTION

3.01 EQUIPMENT

All equipment necessary for the proper removal, transportation, protection and maintenance of topsoil must be available, when required, in first class working condition and shall have been approved by the Peachtree City Project Manager before construction will be permitted to begin.

3.02 REQUIREMENTS

A. Topsoil, except that stockpiled from excavation or embankment areas on the Project, shall not be stored for use but shall be excavated and placed directly into its final position.

B. All areas from which topsoil is to be secured, shall be cleaned of all sticks, boards, stones, lime, cement, ashes, cinders, slag which will hinder or prevent growth.

C. In securing topsoil from a designated pit, or elsewhere, should strata or seams of material occur which do not come under the requirements for topsoil, such material shall be removed from the topsoil or if required by the Peachtree City Project Manager, the pit shall be abandoned.

D. Before placing or depositing topsoil upon any areas, all improvements within the area shall be completed, unless otherwise approved by the Peachtree City Project Manager.

E. The areas or pits into which topsoil is to be placed or incorporated, shall be prepared before securing topsoil for use. The depth to which topsoil is excavated in any pit, shall be subject to the direction of and be approved by the Peachtree City Project Manager.

F. All stockpiled soils shall have adequate erosion control features in place to prevent the loss of any material from said stockpile area into storm sewers, ditches, swales, streams, ponds, lakes or waterways of any kind.

G. Topsoil shall be transported in vehicles which will not lose or scatter the topsoil during transportation.

H. Topsoil shall be placed upon or incorporated into prepared areas or pits in accordance with the provisions and requirements set out in the sections of these Specifications covering the particular type or kind of planting or seeding for which topsoil is required.

I. Rock sloped and other rock areas which are to be seeded shall be capped with 9-inches of suitable material before topsoil is used.

3.03 MAINTENANCE

The Contractor shall maintain topsoil, at Contractor's own expense, in connection with any seeding or planting, or otherwise, until final completion of the Project. Maintenance shall consist of preserving, protecting, replacing and such other work as may be necessary to keep the Project in a satisfactory condition.

3.04 CLEANING

A. Final cleaning shall consist of completely cleaning the area of all equipment, rubbish, excess material and unused materials which will mar the appearance of the Project and disposing of the same satisfactorily.

B. All pavements and structures shall be swept clean of all dirt or rubbish which may have become deposited upon them during construction.

C. In addition, final cleaning up shall be performed in accordance with the requirements of these Specifications.

END OF SECTION

SECTION 31 20 00

EARTH MOVING

PART 1 GENERAL

1.01 SCOPE

A. This Section includes earthwork and related operations, including, but not limited to dewatering, excavating all classes of material encountered, pumping, draining and handling of water encountered in the excavations, handling, storage, transportation and disposal of all excavated and unsuitable material, construction of fills and embankments, backfilling around structures, compacting, all sheeting, shoring and bracing, preparation of subgrades, surfacing and grading, and any other similar, incidental, or appurtenant earthwork operations which may be necessary to properly complete the work.

B. The Contractor shall provide all services, labor, materials, and equipment required for all earthwork and related operations, necessary or convenient to the Contractor, for furnishing complete work as shown on the Drawings or specified in these Contract Documents.

1.02 RELATED SECTIONS

A. Geotechnical Report - Section 00 31 32 (If provided in bidding documents)

B. Site Preparation - Section 31 10 00

C. Trench Excavation and Backfill - Section 31 23 16

1.03 GENERAL

A. The elevations shown on the Drawings as existing are taken from the best existing data and are intended to give reasonably accurate information about the existing elevations. They are not precise and the Contractor shall become satisfied as to the exact quantities of excavation and fill required.

B. Earthwork operations shall be performed in a safe and proper manner with appropriate precautions being taken against all hazards.

C. All excavated and filled areas for structures, trenches, fills, topsoil areas, embankments, and channels shall be maintained by the Contractor in good condition at all times until final acceptance by the Owner. All damage caused by erosion or other construction operations shall be repaired by the Contractor using material of the same type as the damaged material.

D. The Contractor shall control grading in a manner to prevent surface water from running

into excavations. Obstruction of surface drainage shall be avoided and means shall be provided whereby storm water can be uninterrupted in existing gutters, other surface drains, or temporary drains. Free access must be provided to all fire hydrants and meters.

E. Tests for compaction and density shall be conducted by the Peachtree City Project Manager or by an independent testing laboratory selected in accordance with Section 01 45 29 of these Specifications.

1. The soils testing laboratory is responsible for the following:

   a. Field compaction testing shall be based on using the maximum dry density determined by the Standard Proctor Compaction Test in accordance with ASTM D 698.

   b. Determination of in-place backfill density shall be done in accordance with ASTM D 1556, “Density and unit weight of Soil In Place by the Sand-Cone Method”, ASTM D 2937, “Density of Soil In Place by the Drive-Cylinder Method” or ASTM D 2922, “Density of Soil and Soil-Aggregate In Place by Nuclear Methods (Shallow Depth)”.

   c. Field density tests for each lift; one test for each 5,000 square feet of fill or minimum one test per lift.

   d. Inspecting and testing stripped site, subgrades and proposed fill materials.

2. Contractor's duties relative to testing include:

   a. Notifying laboratory of conditions requiring testing.

   b. Coordinating with laboratory for field testing.

   c. Providing representative fill soil samples to the laboratory for test purposes. Provide 50 pound samples of each fill soil.

3. Inspection

   a. Earthwork operations, suitability of excavated materials for fill and backfill, and placing and compaction of fill and backfill is subject to inspection. Peachtree City Project Manager will observe earthwork operations.

   b. Foundations and shallow spread footing foundations are required to be inspected by an Peachtree City Project Manager to verify suitable bearing and construction.

F. All earthwork operations shall comply with the requirements of OSHA Construction Standards, Part 1926, Subpart P, Excavations, Trenching, and Shoring, and Subpart O, Motor Vehicles, Mechanized Equipment, and Marine Operations, and shall be conducted in a manner acceptable to the Peachtree City Project Manager.

G. It is understood and agreed that the Contractor has made a thorough investigation of the surface and subsurface conditions of the site and any special construction problems

which might arise as a result of nearby watercourses and floodplains. The Contractor shall be responsible for providing all services, labor, equipment, and materials necessary or convenient to the Contractor for completing the work within the time specified in these Contract Documents.

H. Safety

Perform all trench excavation and backfilling activities in accordance with the Occupational Safety and Health Act of 1970 (PL 91-596), as amended. The Contractor shall pay particular attention to the Safety and Health Regulations Part 1926, Subpart P "Excavation, Trenching & Shoring" as described in OSHA publication 2226.

PART 2 PRODUCTS

2.01 SOILS CLASSIFICATIONS

Bedding materials listed here include a number of processed materials plus the soil types defined according to the Unified Soil Classification System (USCS) in ASTM D 2487, Standard Method for Classification of Soils for Engineering Purposes. (See below for description of soil classification). These materials are grouped into five broad categories according to their suitability for this application:

A. Class I - Angular, 1/4 to 1 1/2 inches (6 to 40 mm) graded stone, including such as coral, slag, cinders, crushed shells and crushed stone. Note - The size range and resulting high voids ratio of Class I material make it suitable for use to dewater trenches during pipe installation. This permeable characteristic dictates that its use be limited to locations where pipe support will not be lost by migration of other embedment materials into the Class I material. When such migration is possible, the material's minimum size range should be reduced to finer than 1/4 inch (6 mm) and the gradation properly designed to limit the size of the voids.

B. Class II - Coarse sands and gravels with maximum particle size of 1 1/2 inch (40 mm), including variously graded sands and gravels containing small percentages of fines, generally granular and non-cohesive, either wet or dry. Soil Types GW, GP, SW and SP are included in this class. Note - Sands and gravels which are clean or borderline between clean and with fines should be included. Coarse-grained soils with less than 12% but more than 5% fines are neglected in ASTM D2487 and the USCS and should be included. The gradation of Class II material influences its density and pipe support strength when loosely placed. The gradation of Class II material influences its density and pipe support strength when loosely placed. The gradation of Class II material may be critical to the pipe support and stability of the foundation and embedment if the material is imported and is not native to the trench excavation. A gradation other than well graded, such as uniformly graded or gap graded, may permit loss of support by migration into void spaces of a finer grained natural material from the trench wall and foundation.

C. Class III - Fine sand and clayey (clay filled) gravels, including fine sands, sand-clay mixtures and gravel-clay mixtures. Soil Types SM, GC, SM, and SC are included in this class.

D. Class IV - Silt, silty clays and clays, including inorganic clays and silts of not to high plasticity and liquid limits. Soil Types MH, ML, CH, and CL are included in this class. Note- Caution should be used in the design and selection of the degree and method of compaction for Class IV soils because of the difficulty in properly controlling the moisture content under field conditions. Some Class IV soils with medium to high plasticity and with liquid limits greater than 50% (CH, MH, CH-MH) exhibit reduced strength when wet and should only be used for bedding, haunching and initial backfill in arid locations where the pipe embedment will not be saturated by ground water, rainfall and/or exfiltration from the pipeline system. Class IV soils with low to medium plasticity and with liquid limits lower than 50% (CL, ML, CL-ML) also require careful consideration in design and installation to control moisture content but need not be restricted in use to arid locations.

E. Class V - This class includes the organic soils OL, OH, and PT as well as soils containing frozen earth, debris, rocks larger than 1 1/2 inch (40 mm) in diameter, and other foreign materials. These materials are not recommended for bedding, haunching or initial backfill.

DESCRIPTION OF EMBEDMENT MATERIAL CLASSIFICATIONS

SOIL CLASS	SOIL TYPE	DESCRIPTION MATERIAL CLASSIFICATION
Class I Soils *	---	Manufactured angular, granular material, 3/4 to 1 1/2 inches (6 to 40 mm) size, including materials having regional significance such as crushed stone, or rock, broken coral, crushed slag, cinders, or crushed shells.
Class II Soil **	GW	Well-graded gravels and gravel-sand mixtures, little or no fines. 50% or more retained on No. 4 sieve. More than 95% retained on No. 200 sieve. Clean..
	GP	Poorly graded gravels and gravel-sand mixtures, little or no fines. 50% or more retained on No. 4 sieve. More than 95% retained on No. 200 sieve. Clean
	SW	Well-graded sands and gravely sands, little or no fines. More than 50% passes No. 4 sieve. More than 95% retained on No. 200 sieve. Clean.
	SP	Poorly graded sands and gravelly sand, little or no fines. More than 50% passes No. 4 sieve. More than 95% retained on No. 200 sieve. Clean.

Class III Soil ***	GM	Silty gravels, gravel-sand-silt mixtures. 50% or more retained on No. 200 sieve.
	GC	Clayey gravels, gravel-sand-clay mixtures. 50% or more retained on No. 4 sieve. More than 50% retained on No. 200 sieve.
	SM	Silty sands, sand-silt mixtures. More than 50% passes No. 4 sieve. More than 50% retained on No. 200 sieve.
	SC	Clayey sands, sand-clay mixtures. More than 50% passes No. 4 sieve. More than 50% retained on No. 200 sieve.
Class IV Soils	ML	Inorganic silts, very fine sands, rock flour, silty or clayey fine sands. Liquid limit 50% or less. 50% or more passes No. 200 sieve.
	CL	Inorganic clays of low to medium plasticity, gravelly clays, sandy clays, silty clays, lean clays. Liquid limit 50% or less. 50% or more passes No. 200 sieve.
	MH	Inorganic silts, micaceous or diatomaceous fine sands or silts, elastic silts. Liquid limit greater than 50%. 50% or more passes No. 200 sieve.
	CH	Inorganic clays of high plasticity, fat clays. Liquid limit greater than 50%. 50% or more passes No. 200 sieve.
Class V Soils	OL	Organic silts and organic silty clays of low plasticity. Liquid limit 50% or less. 50% or less. 50% or more passes No. 200 sieve.
	OH	Organic clays of medium to high plasticity. Liquid limit 50% or less. 50% or more passes No. 200 sieve.
	PT	Peat, muck and other highly organic soils.

* Soils defined as Class I materials are not defined in ASTM D2487.

** In accordance with ASTM D2487, less than 5% pass No. 200 sieve.

*** In accordance with ASTM D2487, more than 12% pass No. 200 sieve. Soils with 5% to 12% pass No. 200 sieve fall in borderline classification, e.g. GP-GC.

2.02 FILL MATERIAL

A. Sand Fill: Material shall consist of a clean sand with a fineness modulus of 1.6 to 3.1 and containing not more than 10 percent by weight finer than No. 200 U.S. Standard Sieve.

B. Earth Fill: Material shall consist of inorganic material free of roots, cobbles and boulders and classified as SM, ML, SC, or CL by ASTM D2487-85 "Standard Methods for Classification of Soils for Engineering Purposes". Earth Fill shall also conform to the following:

1. Liquid Limit = 50 maximum
2. Plasticity Index = 20 maximum
3. Dry Unit Weight = 90 pcf minimum maximum density

C. Coarse Aggregate (Crushed Stone): Coarse aggregate shall conform to the Georgia Department of Transportation Standard Specifications for Construction of Road and Bridges, Table 800.01 H, Size No. 57.

2.03 UNSUITABLE SITE FILL MATERIAL

Material which does not conform to the above classifications (soil classification SP, SW.GM, CH, MH, OH, OL, and PT) may be used as Site Fill material in areas identified on the drawings as "spoil areas", in areas with no structures and or roads and other non-critical areas.

2.04 SHEETING, BRACING AND TIMBERING

A. Sheeting, Bracing and Timbering: Unless the slopes are to be benched back per applicable regulations, the Contractor shall furnish, place and maintain all sheeting, bracing and timbering required to properly support trenches and other excavations in open cut and to prevent all movement of the soil, pavement, structures, or utilities outside of the trench or pit.

1. General

a. Cofferdams and bracing design, including computations, shall be prepared before commencing construction operations. Drawings and design computations shall be signed and sealed by a professional engineer registered in the State of Georgia. The drawings and design computations shall be submitted to the Peachtree City Project Manager for informational purposes only.

b. Sheeting, bracing and timbering shall be so placed as to allow the work to be constructed to the lines and grades shown on the Drawings and as ordered by the Peachtree City Project Manager.

c. If at any time the method being used by the Contractor for supporting any material or structure in or adjacent to any excavation is not

reasonably safe, the Contractor shall provide additional bracing and support necessary to furnish the added degree of safety.

d. All sheeting in contact with the concrete or masonry shall be cut off as directed by the Peachtree City Project Manager and left in place.

2. Timber: Timber may be substituted for steel sheet piling when approved by the Peachtree City Project Manager. Timber for shoring, sheeting or bracing shall be sound and free of large or loose knots, and in good condition. Size and spacing shall be in accordance with OSHA regulations.

3. Steel Sheet Piling: Steel sheet piling shall be the continuous interlock type. The weight, depth, and section modulus of the sheet piling shall be sufficient to restrain the loads of earth pressure and surcharge from existing foundations and/or live loads. Procedure for installation and bracing shall be so scheduled and coordinated with the removal of the earth that the ground under existing structures shall be protected against lateral movement at all times. The Contractor shall provide closure and sealing between sheet piling and existing facilities. Steel piling shall be removed, unless otherwise directed by the Peachtree City Project Manager.

4. Remove bracing and sheeting in units when backfill reaches the point necessary to protect the structures and adjacent property. Leave sheeting in place when, in the opinion of the Peachtree City Project Manager, it cannot be safely removed. Cut off sheeting left in place at least two feet below the surface.

2.05 FILTER FABRIC

A. Filter fabric associated with bedding shall be a UV stabilized, spunbonded, continuous filament, needle punched, polypropylene, nonwoven geotextile.

B. The fabric shall have an equivalent open size (EOS or AOS) of 120 - 70. The fabric shall also conform to the minimum property values listed in the following table:

Fabric Property	Unit	Test Procedure	Average Value	
			Typical	Minimum
Weight	oz/yd^2	ASTM D 3776	8.3	
Thickness	mils	ASTM D 1777	105	
Grab Strength	lbs.	ASTM D 4632	240	210
Grab Elongation	%	ASTM D 4632	>50	50
Tear Strength	lbs.	ASTM D 4533	100	85
Mullen Burst	psi	ASTM D 3786	350	320
Puncture Resistance	lbs.	ASTM D 4833	115	100

Permittivity	sec^{-1}	ASTM D 4491	1.7	
Water Permeability	cm/sec	ASTM D 4491	0.4	
Water Flow Rate	gpm/ft^2	ASTM D 4491	120	
UV Resistance (500 hrs)	%	ASTM D 4355	>85	
PH			2 – 13	

C. Filter fabric shall be Polyfelt TS 700, Trevira 1125 or SuPac 7-MP.

2.06 CONCRETE

Concrete for initial backfill or encasement shall have a compressive strength of not less than 3,000 psi, with not less than 5.5 bags of cement per cubic yard and a slump between 3 and 5-inches. Ready-mixed concrete shall be mixed and transported in accordance with ASTM C 94. Reinforcing steel shall conform to the requirements of ASTM A 615, Grade 60.

2.07 FLOWABLE FILL

Flowable fill, where required for backfill, shall meet the requirements of Georgia Department of Transportation Standard Specifications, Section 600 for Excavatable or Non-Excavatable type.

PART 3 EXECUTION

3.01 GENERAL

A. Safety: Comply with local regulations and with the provisions of the “Manual of Accident Prevention in Construction” of the Associated General Contractors of America, Inc., Occupational Safety and Health Act and all other applicable safety regulations.

B. Topsoil

1. Remove all topsoil to a depth at which subsoil is encountered, from all areas under buildings, pavements, and from all areas which are to be cut to lower grades or filled.
2. With the Peachtree City Project Manager's approval or if noted on plans, topsoil to be used for finish grading may be stored on the site.
3. Other topsoil may be used for fill in non-critical areas with approval of the Peachtree City Project Manager.
4. Properly dispose of all excess topsoil in the designated area.

C. Bracing and Sheeting

1. Furnish, put in place, and maintain all sheeting, bracing, and shoring as may be required to properly support the sides of all excavations and to prevent all movement of earth which could in any way injure the work, adjacent property or workers.

2. Properly support all excavations where necessary to conform to all pertinent rules and regulations and these Specifications, even though, such locations are not indicated on the Drawings.

3. Exercise care in the removal of sheeting, shoring, bracing and timbering to prevent collapse or caving of the excavation faces being supported and damage to the work and adjacent property.

4. Do not leave any sheeting or bracing in the trench or excavation after completion of the work, unless approved by the Peachtree City Project Manager.

D. Obstructions

1. Remove and dispose of all boulders, sidewalks, driveways, pavement, pipes, and the like, as required for the performance of the work.

2. Exercise care in excavating around catch basins, inlets and manholes so as to not disturb or damage these structures.

3. Avoid removing or loosening castings or pushing dirt into catch basins, inlets and manholes.

4. Damaged or displaced structures or casting shall be repaired, replaced and dirt entering the structures during the performance of the work shall be removed at no additional cost to the Owner.

E. Utilities to be Abandoned

1. When pipes, conduits, sewers, or other structures are removed from the trench, leaving dead ends in the ground, such ends shall be fully plugged or sealed with brick and non-shrink grout.

2. Abandoned structures such as manholes or chambers shall be entirely removed unless otherwise noted.

3. All materials from abandoned utilities shall be removed from the site.

4. All salvageable materials shall become the property of the Contractor unless otherwise noted.

5. All equipment to be salvaged and remain the property of the Owner shall be turned over to the Owner at a designated location.

F. Extra Earth Excavation

1. In case soft or excessively wet material which, in the opinion of the Peachtree City Project Manager, is not suitable, is encountered below the final subgrade elevation of an excavation or underneath a structure, the Peachtree City Project

Manager may order the removal of this material and its replacement with crushed stone, filter fabric, or other suitable material in order to make a suitable foundation for the construction of the structure.

G. Cutting Paved Surfaces and Similar Improvements

1. Remove existing pavement as necessary for installing pipe utilities and appurtenances or as otherwise shown on the Drawings.

2. Before removing any pavement, mark the pavement neatly, paralleling pipe lines and existing street lines. Space the marks the width of the trench.

3. Break asphalt pavement along the marks using rotary saws or other suitable tools. Break concrete pavement along the marks by use of scoring with a rotary saw and breaking below the score by the use of jackhammers or other suitable tools.

4. Do not pull pavement with machines until completely broken and separated from pavement to remain.

5. Do not disturb or damage the adjacent pavement. If the adjacent pavement is disturbed or damaged, remove and replace the damaged pavement. No additional payment will be made for removing and replacing damaged adjacent pavement.

6. Remove and replace sidewalks disturbed by construction for their full width and to the nearest undisturbed joint.

7. The Contractor may tunnel under curbs that are encountered. Remove and replace any curb disturbed by construction to the nearest undisturbed joint.

3.02 EXCAVATION

A. Method

1. All excavation shall be by open cut from the surface except as indicated on the Drawings.

2. All excavations for pipe appurtenances and structures shall be made in such a manner, and to such depth and width, as will give ample room for building the structures, and for bracing, sheeting, and supporting the sides of the excavation, for pumping and draining groundwater which may be encountered, and for the removal from the excavation of all materials excavated.

3. Take special care so that the soil below the bottom of the structure to be built is left undisturbed.

B. Grades: Excavate to grades indicated on the Drawings. Where excavation grades are not indicated on the Drawings, excavate as required to accommodate installation.

C. Disposal of Excavated Material

1. Remove and properly dispose of all excavated material not needed to complete filling, backfilling and grading.

2. Dispose of excess earth and rock excavated materials at locations on-site designated by the Peachtree City Project Manager. Off-site disposal of all other material shall be and in accordance with all requirements of federal, state, county, and municipal regulations. No debris of any kind shall be deposited in any stream or body of water, or on any street. No debris shall be deposited on any private property, except by written consent of the property owner. In no case shall any material be shoved onto abutting private properties, or be buried in embankments or trenches on the Project.

3.03 EXCAVATING FOR STRUCTURES

A. Earth Excavation: Earth excavation shall include all substances to be excavated other than rock. Earth excavation for structures shall be to limits not less than two feet outside wall lines, to allow for formwork and inspection, and further as necessary to permit the trades to install their work. All materials loosened or disturbed by excavation shall be removed from surfaces to receive concrete or crushed stone.

B. Excavation for Foundations: Footings and slabs on grades shall rest on undisturbed earth, rock or compacted materials to insure proper bearing.

1. Unsuitable Foundation Material: Any material, in the opinion of the Peachtree City Project Manager, which is unsuitable for foundation shall be removed and replaced with compacted crushed stone, or with compacted fill material as directed by the Peachtree City Project Manager. No determination of unsuitability will be made until all requirements for dewatering are satisfactorily met.

2. Foundation in Rock: Foundations for a structure shall be on similar materials. Should excavation for a foundation be partially in rock, the Contractor shall undercut that portion of the rock 12-inches and bring the excavation to grade with compacted crushed stone.

3. Pipe Trenches Beneath Structures: Where piping or conduit passes beneath footings or slabs resting on grade, trenches shall be excavated to provide a minimum 6-inch clearance from all surfaces of the pipe or conduit. The trench shall be backfilled to the base of the structure with concrete.

4. Unauthorized Excavation: Care shall be taken that excavation does not extend below bottom levels of footings or slabs on earth or rock. Should the excavation, through carelessness or neglect, be carried below such levels, the Contractor shall fill in the resulting excess excavation with concrete under footings and compacted crushed stone or other approved material under slabs. Should excavation be carried beyond outside lines of footings such excess excavation shall be filled with concrete, or formwork shall be provided, as

directed by the Peachtree City Project Manager.

C. Unsuitable Bearing

1. If suitable bearings for foundations are not encountered at the elevations indicated on the Drawings, immediately notify the Peachtree City Project Manager.

2. Do not proceed further until instructions are received.

3.04 DEWATERING REQUIREMENT

A. The Contractor may use any dewatering method he deems feasible so long as it results in working in the dry and stable soil conditions.

B. The Contractor shall conform and meet all conditions, obtain necessary permits and requirements of the regulatory agencies that have jurisdiction.

C. It is the intent of these specifications that an adequate dewatering system be installed to lower and control the groundwater in order to permit excavation, construction, grading and the placement of fill materials, all to be performed under dry conditions. The dewatering system shall be adequate to pre-drain the water-bearing strata above and below the bottom of the excavation.

D. The Contractor shall be solely responsible for the arrangement, location and depths of dewatering system necessary to accomplish the work described under this section of the specifications. The dewatering shall be accomplished in a manner that will reduce the hydrostatic head below any excavation to the extent that the water level in the construction area are a minimum of three (3) feet below the prevailing excavation surface and any surface to be compacted; will prevent the loss of fines, seepage, boils, quick conditions, or softening of the foundation strata; will maintain stability of the sides and bottom of the excavation; and will result in all construction operations being performed in the dry.

E. The Contractor shall promptly dispose of all water removed from the excavations in such a manner as will not endanger public health, damage public or private property, or affect adversely any portion of the work under construction or completed by him or any other Contractor. Contractor shall obtain written permission from Peachtree City and the Private Owner for any property involved before digging ditches or constructing water courses for the removal of water.

F. The disposal of water from the dewatering system shall meet the requirements of all regulatory agencies having jurisdiction.

G. If the dewatering requirements are not satisfied due to inadequacy or failure of the dewatering system, then loosening of the foundation strata, or instability of the slopes, or damage to the foundations or structures may occur. The supply of all labor and materials, and the performance of all work necessary to carry out additional work for reinstatement of the structures of foundation soil resulting from such inadequacy or failure shall be undertaken by the Contractor subject to the approval of the

Peachtree City Project Manager, and at no additional expense to Peachtree City.

3.05 ROCK EXCAVATION

A. Definition of Mass Rock (only for payment purposes where payment is on a unit quantity basis): Any material which cannot be excavated with a single-tooth ripper drawn by a crawler tractor having a minimum draw bar pull rated at not less than 56,000 pounds (comparable to Caterpillar D 8K or comparable to Caterpillar 973 front-end loader, and occupying an original volume of at least one cubic yard). The Peachtree City Project Manager shall be the sole determinate as to the limits to which the material is classified as rock.

B. Definition of Trench Rock (only for payment purposes where payment is on a unit quantity basis): Any material which cannot be excavated with a backhoe having a bucket curling force rated at not less than 25,700 pounds (Caterpillar Model 225 or equivalent), and occupying an original volume of at least one-half (1/2) cubic yards.

C. Excavation: Where rock is encountered within excavation for structures, it shall be excavated to the lines and grades indicated on the Drawings or as otherwise directed by the Peachtree City Project Manager. The Contractor shall be responsible for obtaining any blasting permits required.

D. Blasting: No blasting will be allowed except via written authorization of the Peachtree City Project Manager. If allowed, blasting operations shall be conducted in accordance with all existing ordinances and regulations. All structures shall be protected from the effects of the blast. Blasting shall be performed and supervised by qualified and licensed workers. Dispose of excavated rock in accordance with applicable federal, state, county and local regulations. All blasting within 750 ft of an inhabited structure and or roadway must be siesmic monitored for ground and air vibrations. Peak Particle Velocity shall be measured at nearest structure and shall be 0.5 inch per second or less during blasts. Shots must be covered with at least 6 feet of earthen and synthetic cover (blasting mats). Bore hole diameter must not exceed 4” in diameter. Blast hole cannot exceed 20 feet of solid rock with single delay detonator (in terms, if drill depth exceeds more than 20 feet in depth, decking must be done, accomplish by using multiple detonators in the blast hole. The blast holes must be stemmed with gravel, 89/57 stone. Pre-blast inspections are required. Inspections shall be via an engineer that includes inspection of structure, and pictures of any existing damage or cracks that structure may have prior to blasting.

E. If excess excavation is made or the material becomes disturbed so as to require removal below final subgrade elevations or beyond the prescribed limits, the resulting space shall be refilled with concrete in accordance with Section 2.07 of this Specification

F. Measurement for Payment

All rock excavation shall be paid for as an incidental part of the item on which the work is done except where a separate, unqualified item for rock excavation is indicated in the

BID FORM or where rock excavation is ORDERED as an EXTRA by the OWNER, by WRITTEN ORDER. Where payment for rock excavation is established by the BID FORM or ORDERED as an EXTRA by the OWNER, CONTRACTOR shall be paid only for the quantity of rock removed, measured as follows:

A. For all masonry structures such as buildings, tanks, vaults, catch basins, manholes and the like, the horizontal rock measurement shall be made to include 2-1/2 feet from the outside face of finished vertical sidewall of such structure and the vertical rock measurement shall be made from the top elevation of the rock, before disturbed or removed, to the elevation of the under or lower side of the bottom concrete slab of the structure. Any projection below the bottom slab of any structure required for sump, well, or other pertinent construction shall be measured separately.

B. For installation of pipe lines and fittings the horizontal rock measurement shall be the nominal outside diameter of the pertinent pipe plus 16-inches, except, however, that no horizontal measurement shall be considered to be less than 27-inches; the vertical rock measurement shall be made from the top elevation of the rock, before disturbance or removal, to an elevation of 9-inches below the bottom outside surface of the pipe for pipe having a diameter of 8-inches through 24-inches, and to an elevation of 12-inches below the bottom outside surface of the pipe for all pipe having a diameter greater than 24-inches.

G. Excess Rock Excavation

If rock excavated beyond the limits of payment indicated on the Drawings, specified, or authorized in writing by the OWNER, the excess excavation whether resulting from overbreakage or other causes, shall be backfilled, by and at the expense of the CONTRACTOR.

H. Shattered Rock

If rock below normal depth is shattered due to drilling or blasting operations and such shattered rock is unfit for foundations, the shattered rock shall be removed and the excavation shall be backfilled as described above in EXCESS ROCK EXCAVATION. All such removal and backfilling shall be done at the expense of the CONTRACTOR.

3.06 COMPACTION

A. Fill materials supporting roadways, parking areas, sidewalks, structures, and buildings and backfill around structures shall be compacted to 95 percent of the standard proctor density. The top 12-inches of fill materials supporting structures, concrete pads, pavement, curb and gutter shall be compacted to 98 percent of the standard proctor density. Fill placed for general site grading shall be compacted to 90 percent of the standard proctor density.

B. Compaction of embankments shall be by vibratory sheepsfoot or pad-foot rollers with staggered, uniformly spaced knobs and suitable cleaning devices. The projected area of

each knob and the number and spacing of the knobs shall be such that the total weight of the roller and ballast when distributed over the area of one row of knobs shall be 250 psi. Placement and compaction of materials shall extend at least 5 feet beyond the final contours sufficiently to insure compaction of the material at the resulting final surface. Final contours shall then be achieved by a tracked bulldozer shaping the face of the embankment.

C. Compaction of backfill next to walls shall be accomplished with hand-powered tamping equipment. The backfill shall be placed in 8-inch maximum lifts, with each lift compacted to 95 percent of standard proctor density.

D. If tests indicate that density of fill is less than that specified, the area shall be, as directed by the Peachtree City Project Manager, either recompacted or undercut, filled, and compacted until specified density is achieved.

3.07 FILL

A. Controlled Fill

1. The fill for roadways, parking areas, walks, structures, and building slabs on grade shall be controlled fill.
2. After the existing ground or excavated area has been proofrolled and examined by the Peachtree City Project Manager, all holes and other irregularities shall be filled and compacted before the main fill is placed.
3. The fill shall be placed in even layers not exceeding 8-inches in depth and shall be thoroughly compacted as herein specified.
4. If an analysis of the soil being placed shows a marked difference from one location to another, the fill being placed shall not be made up of a mixture of these materials.
5. Each different type of material shall be handled continuously so that field control of moisture and density may be based upon a known type of material.
6. No fill shall be placed following a heavy rain without first making certain on isolated test areas that compaction can be obtained without damage to the already compacted fill.

B. Proofrolling

1. All areas where roadways, parking areas, sidewalks, structures, and buildings are to be constructed on cut areas, compacted fill, and other areas where indicated on the Drawings, shall be proofrolled to detect soft spots prior to the placement of fill material or building foundations.
2. Proofrolling shall be performed using a fully loaded tandem-axle dump truck 20 tons or other suitable pneumatic tired equipment over the subgrade before the subgrade is shaped.
3. Proofrolling shall be witnessed by the Peachtree City Project Manager.

4. Subgrade shall be proofrolled with 10 overlapping passes of the roller. Depressions that develop during the proofrolling operation shall be filled with suitable material and those filled areas shall be proofrolled with six passes of the roller. If, after having been filled and proofrolled, the subgrade areas that still “pump” or “rut”, shall be further evaluated by a geotechnical engineer, and remedial work be determined based on the conditions found at locations under structures or pavement. The contractor shall execute remedial work determined by the geotechnical engineer to achieve a subgrade acceptable to the Peachtree City Project Manager.

5. After the proofrolled subgrade has been accepted by the Peachtree City Project Manager, the surface of the subgrade shall be finish rolled with a smooth steel wheel roller weighing not less than 10 tons. Finished surface of the subgrade shall be within a tolerance of 1/4-inch at every point.

6. Conduits, pipes, culverts, and underdrains shall be neither disturbed nor damaged by proofrolling operations. Rollers shall neither pass over, nor approach closer than five feet to, conduits, pipes, culverts, and underdrains unless the tops of those products are deeper than three feet.

C. Placement

1. Prior to placement of any material in embankments, the area within embankment limits shall be stripped of topsoil and all unsuitable materials removed in accordance with this Section. The area shall then be scarified to a depth of at least 6-inches.

2. Fill materials shall be placed in continuous, approximately horizontal layers extending the full width of the embankment cross-section and the full dimension of the excavation where practical and having an uncompacted thickness of not over 8-inches.

D. Final Grading: Upon completion of construction operations, the area shall be graded to finish contour elevations and grades shown on the Drawings. Graded areas shall be made to blend into conformation with remaining ground surfaces. All surfaces shall be left smooth and free to drain.

E. Excess Material: Surfaces and slopes of waste fills shall be left smooth and free to drain.

F. Moisture

1. Fill materials shall be placed at optimum moisture content within practicable limits, but not less or more than two percent of optimum. Optimum moisture shall be maintained by sprinkling the layers as placed or by allowing materials to dry before placement.

2. If fill material is too wet, provide and operate approved means to assist the drying of the fill until suitable for compaction.

3. If fill material is too dry, provide and operate approved means to add moisture to the fill layers.

3.08 BACKFILLING

A. Backfill carefully to restore the ground surface to its original condition. Dispose of excess material in accordance with this Section.

B. Compact backfill underlying roadways, parking areas, sidewalks, structures and buildings in accordance with the requirements of Article 3.06 of this Section.

C. Backfilling Around Structures

1. General

a. Remove debris from excavations before backfilling.

b. Do not backfill against foundation walls until so directed by the Peachtree City Project Manager nor until all indicated perimeter insulation and/or waterproofing is in place.

c. Protect such insulation and/or waterproofing during filling operations.

d. Do not backfill against water retaining structures until successful leakage tests have been completed.

e. Wherever possible, backfilling shall be simultaneous on both sides of walls to equalize lateral pressures.

f. Do not backfill against walls until all permanent construction is in place to furnish lateral support on both top and bottom of wall.

g. Backfilling against walls shall take place after all the concrete in the affected members has attained the specified strengths.

h. To prevent excessive lateral pressure on external walls, large compaction equipment shall not be allowed within a zone wall footing.

2. Materials: Backfill material placed against structures built or encountered during the work of this Section shall be suitable fill material. No broken concrete, bricks or similar materials will be permitted as backfill.

3.09 GRADING

A. General: Perform all rough and finish grading required to attain the elevations indicated on the Drawings. Perform finish grading to an accuracy of $\pm$0.10 foot.

B. Treatment After Completion of Grading

1. After grading is completed, permit no further excavation, filling or grading, except with the approval of the Peachtree City Project Manager.

2. Use all means necessary to prevent the erosion of freshly graded areas during construction and until such time as permanent drainage and erosion control measures have been installed.

3.10 SETTLEMENT

A. The Contractor shall be responsible for all settlement of backfill, fills and embankments which may occur within one year after final acceptance of the Work by the Owner.

B. The Contractor shall make, or cause to be made, all repairs or replacements made necessary by settlement within 30 days after receipt of written notice from the Peachtree City Project Manager or Owner.

3.11 CLEAN-UP

A. Leave unused materials in a neat, compact stockpile.

B. Remove unused stockpiled materials, leave area in a clean and neat condition. Grade stockpile area to prevent standing surface water.

C. Leave borrow areas in a clean and neat condition. Grade to prevent standing surface water.

END OF SECTION

SECTION 31 23 16

TRENCH EXCAVATION AND BACKFILL

PART 1 GENERAL

1.01 SCOPE

A. The work under this Section consists of furnishing all labor, equipment and materials and performing all operations in connection with the trench excavation and backfill required to install the site utilities, including all pipelines, electrical conduits, and duct banks as shown on the plans and as specified.

B. Excavation shall include the removal of any tree stumps, brush, debris or other obstacles which remain after the clearing and grubbing operations, which may obstruct the work, and the excavation and removal of all earth, rock or other materials to the extent necessary to install the pipe and appurtenances in conformance with the lines and grades shown on the plans and as specified.

C. Backfill shall include the filling and compaction of the trenches and excavations up to the surrounding ground surface or road grade at crossing.

D. The trench is divided into five specific areas:

1. Foundation: The area beneath the bedding, sometimes also referenced to as trench stabilization.
2. Bedding: The area above the trench bottom (or foundation) and below the bottom of the barrel of the pipe.
3. Haunching: The area above the bottom of the barrel of the pipe up to a specified height above the bottom of the barrel of the pipe.
4. Initial Backfill: The area above the haunching material and below a plane 12-inches above the top of the barrel of the pipe.
5. Final Backfill: The area above a plane 12-inches above the top of the barrel of the pipe.

E. The choice of method, means, techniques and equipment rests with the Contractor. The Contractor shall select the method and equipment for trench excavation and backfill depending upon the type of material to be excavated and backfilled, the depth of excavation, the amount of space available for operation of equipment, storage of excavated material, proximity of man-made improvements to be protected, available easement or right-of-way and prevailing practice in the area.

1.02 RELATED SECTIONS

A. Geotechnical report: Section 00 31 32 (If Provided in bidding documents)

B. Site Clearing: Section 31 10 00.

C. Earth Moving 30 20 00.

1.03 GENERAL

A. The elevations shown on the Drawings as existing are taken from the best existing data and are intended to give reasonably accurate information about the existing elevations. They are not precise and the Contractor shall become satisfied as to the exact quantities of excavation and fill required.

B. Earthwork operations shall be performed in a safe and proper manner with appropriate precautions being taken against all hazards.

C. All excavated and filled areas for structures, trenches, fills, topsoil areas, embankments, and channels shall be maintained by the Contractor in good condition at all times until final acceptance by the Owner. All damage caused by erosion or other construction operations shall be repaired by the Contractor using material of the same type as the damaged material.

D. The Contractor shall control grading in a manner to prevent surface water from running into excavations. Obstruction of surface drainage shall be avoided and means shall be provided whereby storm water can be uninterrupted in existing gutters, other surface drains, or temporary drains. Free access must be provided to all fire hydrants and meters.

E. Tests for compaction and density shall be conducted by the Peachtree City Project Manager or by an independent testing laboratory selected in accordance with Section 01 45 29 of these Specifications.

1. The soils testing laboratory is responsible for the following:

   a. Field compaction testing shall be based on using the maximum dry density determined by the Standard Proctor Compaction Test in accordance with ASTM D 698.

   b. Determination of in-place backfill density shall be done in accordance with ASTM D 1556, “Density and unit weight of Soil In Place by the Sand-Cone Method”, ASTM D 2937, “Density of Soil In Place by the Drive-Cylinder Method” or ASTM D 2922, “Density of Soil and Soil-Aggregate In Place by Nuclear Methods (Shallow Depth)”.

   c. Test frequency for trenches and confined areas of 1 test per two foot vertical lift for every 100 linear feet.

   d. Inspecting and testing stripped site, subgrades and proposed fill materials.

2. Contractor's duties relative to testing include:

   a. Notifying laboratory of conditions requiring testing.

   b. Coordinating with laboratory for field testing.

   c. Providing representative fill soil samples to the laboratory for test

purposes. Provide 50 pound samples of each fill soil.

3. Inspection

a. Earthwork operations, suitability of excavated materials for fill and backfill, and placing and compaction of fill and backfill is subject to inspection. Peachtree City Project Manager will observe earthwork operations.

b. Foundations and shallow spread footing foundations are required to be inspected by an engineer to verify suitable bearing and construction.

F. All earthwork operations shall comply with the requirements of OSHA Construction Standards, Part 1926, Subpart P, Excavations, Trenching, and Shoring, and Subpart O, Motor Vehicles, Mechanized Equipment, and Marine Operations, and shall be conducted in a manner acceptable to the Peachtree City Project Manager.

G. It is understood and agreed that the Contractor has made a thorough investigation of the surface and subsurface conditions of the site and any special construction problems which might arise as a result of nearby watercourses and floodplains. The Contractor shall be responsible for providing all services, labor, equipment, and materials necessary or convenient to the Contractor for completing the work within the time specified in these Contract Documents.

H. Safety

Perform all trench excavation and backfilling activities in accordance with the Occupational Safety and Health Act of 1970 (PL 91-596), as amended. The Contractor shall pay particular attention to the Safety and Health Regulations Part 1926, Subpart P "Excavation, Trenching & Shoring" as described in OSHA publication 2226.

PART 2 PRODUCTS

2.01 SOILS CLASSIFICATIONS

Bedding materials listed here include a number of processed materials plus the soil types defined according to the Unified Soil Classification System (USCS) in ASTM D 2487, Standard Method for Classification of Soils for Engineering Purposes. (See below for description of soil classification). These materials are grouped into five broad categories according to their suitability for this application:

A. Class I - Angular, 1/4 to 1 1/2 inches (6 to 40 mm) graded stone, including such as coral, slag, cinders, crushed shells and crushed stone. Note - The size range and resulting high voids ratio of Class I material make it suitable for use to dewater trenches during pipe installation. This permeable characteristic dictates that its use be limited to locations where pipe support will not be lost by migration of other embedment materials into the Class I material. When such migration is possible,

the material's minimum size range should be reduced to finer than 1/4 inch (6 mm) and the gradation properly designed to limit the size of the voids.

B. Class II - Coarse sands and gravels with maximum particle size of 1 1/2 inch (40 mm), including variously graded sands and gravels containing small percentages of fines, generally granular and non-cohesive, either wet or dry. Soil Types GW, GP, SW and SP are included in this class. Note - Sands and gravels which are clean or borderline between clean and with fines should be included. Coarse-grained soils with less than 12% but more than 5% fines are neglected in ASTM D2487 and the USCS and should be included. The gradation of Class II material influences its density and pipe support strength when loosely placed. The gradation of Class II material influences its density and pipe support strength when loosely placed. The gradation of Class II material may be critical to the pipe support and stability of the foundation and embedment if the material is imported and is not native to the trench excavation. A gradation other than well graded, such as uniformly graded or gap graded, may permit loss of support by migration into void spaces of a finer grained natural material from the trench wall and foundation.

C. Class III - Fine sand and clayey (clay filled) gravels, including fine sands, sand-clay mixtures and gravel-clay mixtures. Soil Types SM, GC, SM, and SC are included in this class.

D. Class IV - Silt, silty clays and clays, including inorganic clays and silts of not to high plasticity and liquid limits. Soil Types MH, ML, CH, and CL are included in this class. Note- Caution should be used in the design and selection of the degree and method of compaction for Class IV soils because of the difficulty in properly controlling the moisture content under field conditions. Some Class IV soils with medium to high plasticity and with liquid limits greater than 50% (CH, MH, CH-MH) exhibit reduced strength when wet and should only be used for bedding, haunching and initial backfill in arid locations where the pipe embedment will not be saturated by ground water, rainfall and/or exfiltration from the pipeline system. Class IV soils with low to medium plasticity and with liquid limits lower than 50% (CL, ML, CL-ML) also require careful consideration in design and installation to control moisture content but need not be restricted in use to arid locations.

E. Class V - This class includes the organic soils OL, OH, and PT as well as soils containing frozen earth, debris, rocks larger than 1 1/2 inch (40 mm) in diameter, and other foreign materials. These materials are not recommended for bedding, haunching or initial backfill.

DESCRIPTION OF EMBEDMENT MATERIAL CLASSIFICATIONS

SOIL CLASS	SOIL TYPE	DESCRIPTION MATERIAL CLASSIFICATION
Class I Soils *	---	Manufactured angular, granular material, 3/4 to 1 1/2 inches (6 to 40 mm) size, including materials having regional significance such as crushed stone, or rock, broken coral, crushed slag, cinders, or crushed shells.

SOIL CLASS	SOIL TYPE	DESCRIPTION MATERIAL CLASSIFICATION
Class II Soil **	GW	Well-graded gravels and gravel-sand mixtures, little or no fines. 50% or more retained on No. 4 sieve. More than 95% retained on No. 200 sieve. Clean.
	GP	Poorly graded gravels and gravel-sand mixtures, little or no fines. 50% or more retained on No. 4 sieve. More than 95% retained on No. 200 sieve. Clean.
	SW	Well-graded sands and gravely sands, little or no fines. More than 50% passes No. 4 sieve. More than 95% retained on No. 200 sieve. Clean.
	SP	Poorly graded sands and gravelly sand, little or no fines. More than 50% passes No. 4 sieve. More than 95% retained on No. 200 sieve. Clean.
Class III Soil ***	GM	Silty gravels, gravel-sand-silt mixtures. 50% or more retained on No. 200 sieve.
	GC	Clayey gravels, gravel-sand-clay mixtures. 50% or more retained on No. 4 sieve. More than 50% retained on No. 200 sieve.
	SM	Silty sands, sand-silt mixtures. More than 50% passes No. 4 sieve. More than 50% retained on No. 200 sieve.
	SC	Clayey sands, sand-clay mixtures. More than 50% passes No. 4 sieve. More than 50% retained on No. 200 sieve.
Class IV Soils	ML	Inorganic silts, very fine sands, rock flour, silty or clayey fine sands. Liquid limit 50% or less. 50% or more passes No. 200 sieve.
	CL	Inorganic clays of low to medium plasticity, gravelly clays, sandy clays, silty clays, lean clays. Liquid limit 50% or less. 50% or more passes No. 200 sieve.
	MH	Inorganic silts, micaceous or diatomaceous fine sands or silts, elastic silts. Liquid limit greater than 50%. 50% or more passes No. 200 sieve.

SOIL CLASS	SOIL TYPE	DESCRIPTION MATERIAL CLASSIFICATION
	CH	Inorganic clays of high plasticity, fat clays. Liquid limit greater than 50%. 50% or more passes No. 200 sieve.
Class V Soils	OL	Organic silts and organic silty clays of low plasticity. Liquid limit 50% or less. 50% or less. 50% or more passes No. 200 sieve.
	OH	Organic clays of medium to high plasticity. Liquid limit 50% or less. 50% or more passes No. 200 sieve.
	PT	Peat, muck and other highly organic soils.

* Soils defined as Class I materials are not defined in ASTM D2487.

** In accordance with ASTM D2487, less than 5% pass No. 200 sieve.

*** In accordance with ASTM D2487, more than 12% pass No. 200 sieve. Soils with 5% to 12% pass No. 200 sieve fall in borderline classification, e.g. GP-GC.

2.02 PIPE BEDDING CLASSES

A. Class A Bedding shall consist of a continuous concrete cradle as determined by the Engineer.

B. Class B Bedding: The pipe shall be bedded with No. 57 stone bedding material placed on the trench foundation. The bedding shall have a minimum thickness beneath the pipe of 4 inches or one-eighth of the outside diameter of the pipe, whichever is greater, and shall extend up the side to the springline. Initial backfill from the pipe horizontal centerline to a level not less than 12 inches above the top of the pipe and shall be bedding material or carefully placed native soil, compacted to 90% of Standard Proctor Density. The final backfill of the soil to ground surface shall be compacted to the specified density.

C. Class C Bedding: The pipe shall be bedded in No. 57 stone bedding material placed on the trench foundation. The bedding shall have a minimum thickness beneath the pipe of 4 inches or one-eighth of the outside diameter of the pipe, whichever is greater, and shall extend up the sides of the pipe one-sixth the outside diameter of the pipe. Initial backfill between the top of haunching and a point 12 inches above the top of pipe shall be compacted to 90% of Standard Proctor Density. The final backfill of the soil to ground surface shall be compacted to the specified density.

D. Crushed stone utilized for bedding and haunching shall meet the requirements of the Georgia Department of Transportation Specification 800.01, Group I (limestone, marble or dolomite) or Group II (quartzite, granite or gneiss). Stone size shall be between No. 57 and No. 4, inclusive.

2.03 TRENCH FOUNDATION MATERIALS

When unsuitable material is encountered and extends more than 6 inches below the pipe. Crushed stone shall be utilized for trench foundation (trench stabilization) and shall meet the requirements of the Georgia Department of Transportation Specification 800.01, Group I (limestone, marble or dolomite) or Group II (quartzite, granite or gneiss). Stone size shall be between No. 57 and No. 4, inclusive or Class I material.

2.04 FILTER FABRIC

A. Filter fabric associated with bedding shall be a UV stabilized, spunbonded, continuous filament, needle punched, polypropylene, nonwoven geotextile.

B. The fabric shall have an equivalent open size (EOS or AOS) of 120 - 70. The fabric shall also conform to the minimum property values listed in the following table:

Fabric Property	Unit	Test Procedure	Average Value	
			Typical	Minimum
Weight	oz/yd^2	ASTM D 3776	8.3	
Thickness	mils	ASTM D 1777	105	
Grab Strength	lbs.	ASTM D 4632	240	210
Grab Elongation	%	ASTM D 4632	>50	50
Tear Strength	lbs.	ASTM D 4533	100	85
Mullen Burst	psi	ASTM D 3786	350	320
Puncture Resistance	lbs.	ASTM D 4833	115	100
Permittivity	sec^{-1}	ASTM D 4491	1.7	
Water Permeability	cm/sec	ASTM D 4491	0.4	
Water Flow Rate	gpm/ft^2	ASTM D 4491	120	
UV Resistance (500 hrs)	%	ASTM D 4355	>85	
PH			2 – 13	

C. If ordered by the Peachtree City Project Manager, the filter fabric manufacturer shall furnish the services of a competent factory representative to supervise and/or inspect the installation of pipe. This service will be furnished for a minimum of 10 days during initial pipe installation.

D. Filter fabric shall be Polyfelt TS 700, Trevira 1125 or SuPac 7-MP.

2.05 BEDDING AND HAUNCHING MATERIALS

A. Crushed stone utilized for bedding and hunching shall meet the requirements of the Georgia Department of Transportation Specification 800.01, Group I (limestone, marble or dolomite) or Group II (quartzite, granite or gneiss). Stone size shall be between No. 57 and No. 4, inclusive.

B. Earth materials shall be suitable materials selected from the trench excavation.

Suitable materials shall be clean and free of rock larger than 2-inches at its largest dimension, organics, cinders, stumps, limbs, frozen earth or mud, man-made wastes and other unsuitable materials. Should the material excavated from the trench be saturated, the saturated material may be used as earth material, provided it is allowed to dry properly and it is capable of meeting the specified compaction requirements. When necessary, earth bedding and haunching materials shall be moistened to facilitate compaction by tamping.

2.06 INITIAL BACKFILL

A. Initial backfill material shall be earth materials or crushed stone as specified for bedding and haunching materials. Soil shall be tamped to 90% of Standard Proctor Density (ASTM D698).

B. Earth materials utilized for initial backfill shall be suitable materials selected from materials excavated from the trench. Suitable materials shall be clean and free of rock larger than 2-inches at its largest dimension, organics, cinders, stumps, limbs, frozen earth or mud, man-made wastes and other unsuitable materials. Should the material excavated from the trench be saturated, the saturated material may be used as earth material, provided it is allowed to dry properly and it is capable of meeting the specified compaction requirements. When necessary, initial backfill materials shall be moistened to facilitate compaction by tamping. If materials excavated from the trench are not suitable for use as initial backfill material, provide select material conforming to the requirements of this Section.

2.07 FINAL BACKFILL

A. Final backfill material shall be general excavated earth materials, shall not contain rock larger than 2-inches at its greatest diameter, cinders, stumps, limbs, man-made wastes and other unsuitable materials. If materials excavated from the trench are not suitable for use as final backfill material, provide select material conforming to the requirements of this Section.

B. In areas not used for streets or driveways, carefully refill in layers not exceeding 8 inches in thickness and thoroughly tamp with hand tamps to one foot above the top of the pipe. Finish filling by machine without tamping. As trench settles, bring back to grade by adding more material. Maintain trenches in safe condition at all times. Restore all special grassing and shrubbery, fences, etc., to original condition. The remaining backfill shall be thoroughly compacted in 8 inch layers to at least 95% (percent) of the Standard Proctor Density (ASTM D698).

C. In streets, roadways and driveways, carefully refill in layers not exceeding 8 inches in thickness and thoroughly tamp with hand tamps to one foot above the top of the pipe. The remaining backfill shall be thoroughly compacted in 8 inch layers to at least 98% (percent) of the Standard Proctor Density (ASTM D698).

D. Backfilling and tamping work in state highway right-of-ways and streets under jurisdiction of the State Highway Department will be in accordance with the State

of Georgia Department of Transportation "Policy and Procedure for Accommodation of Utilities".

2.08 CONCRETE

Concrete for bedding, haunching, initial backfill or encasement shall have a compressive strength of not less than 3,000 psi, with not less than 5.5 bags of cement per cubic yard and a slump between 3 and 5-inches. Ready-mixed concrete shall be mixed and transported in accordance with ASTM C 94. Reinforcing steel shall conform to the requirements of ASTM A 615, Grade 60.

2.09 FLOWABLE FILL

Flowable fill, where required for trench backfill, shall meet the requirements of Georgia Department of Transportation Standard Specifications, Section 600 for Excavatable or Non-Excavatable type.

PART 3 EXECUTION

3.01 EXAMINATION

A. Identify required lines, levels, contours, and datum locations.

B. Locate, identify, and protect utilities that remain and protect from damage. The contractor is required to contact the Utilities Protection Center, Inc. in the State of Georgia call 811 prior to any excavation or construction. Additional information is available at www.gaupc.com. The contractor shall first, Call Before You Dig. Second, Wait the Required Amount of Time. Third, Respect the Marks and Lastly, Dig With Care.

C. Notify utility company to remove and relocate utilities.

3.02 TRENCH EXCAVATION

A. Notify of unexpected subsurface conditions and discontinue affected Work in area until notified to resume work.

B. Slope banks of excavations deeper than 4 feet to angle of repose or less until shored.

C. Do not interfere with 45 degree bearing splay of foundations.

D. Cut trenches O.D of pipe plus two feet minimum or O.D. of pipe plus four feet maximum wide enough to allow installation and inspection of utilities.

E. Hand trim excavations. Remove loose matter.

F. Remove large stones and other hard matter which could damage piping or impede

consistent backfilling or compaction.

G. Remove lumped subsoil, boulders, and rock up to 1/3 cu yd (0.25 cu m) measured by volume.

H. Remove excavated material that is unsuitable for re-use from site.

I. Stockpile excavated material to be re-used in areas designated on site.

J. Remove excess excavated material from site.

K. In areas not used for streets and in unpaved streets, maximum trench width shall be the pipe diameter plus 24 inches. Protect all trees, shrubs and structures. Protect all fences and replace those damaged/removed with like kind. Keep work and equipment within easement limits. Repair and replace any damage.

L. Paved streets shall have a maximum trench width of pipe diameter plus 24 inches. Shore and brace trench walls as necessary to prevent damage to existing paving. Do not cut existing sidewalk, or curb and gutter without approval by the Peachtree City Project Manager. Use rubber tired equipment only on streets. Repair and replace all damage. Saw cut all pavements for smooth edge on replacement.

3.03 DEWATERING REQUIREMENT

A. The Contractor may use any dewatering method he deems feasible so long as it results in working in the dry and stable soil conditions.

B. The Contractor shall conform and meet all conditions, obtain necessary permits and requirements of the regulatory agencies that have jurisdiction.

C. It is the intent of these specifications that an adequate dewatering system be installed to lower and control the groundwater in order to permit excavation, construction, grading and the placement of fill materials, all to be performed under dry conditions. The dewatering system shall be adequate to pre-drain the water-bearing strata above and below the bottom of the excavation.

D. The Contractor shall be solely responsible for the arrangement, location and depths of dewatering system necessary to accomplish the work described under this section of the specifications. The dewatering shall be accomplished in a manner that will reduce the hydrostatic head below any excavation to the extent that the water level in the construction area are a minimum of three (3) feet below the prevailing excavation surface and any surface to be compacted; will prevent the loss of fines, seepage, boils, quick conditions, or softening of the foundation strata; will maintain stability of the sides and bottom of the excavation; and will result in all construction operations being performed in the dry.

E. The Contractor shall promptly dispose of all water removed from the excavations in such a manner as will not endanger public health, damage public or private property, or affect adversely any portion of the work under construction or completed by him or any other Contractor. Contractor shall obtain written permission from Peachtree City and the Private Owner for any property involved before digging ditches or constructing water courses for the removal of water.

F. The disposal of water from the dewatering system shall meet the requirements of all regulatory agencies having jurisdiction.

G. If the dewatering requirements are not satisfied due to inadequacy or failure of the dewatering system, then loosening of the foundation strata, or instability of the slopes, or damage to the foundations or structures may occur. The supply of all labor and materials, and the performance of all work necessary to carry out additional work for reinstatement of the structures of foundation soil resulting from such inadequacy or failure shall be undertaken by the Contractor subject to the approval of the Peachtree City Project Manager, and at no additional expense to the Owner.

3.04 ROCK EXCAVATION

A. Definition of Mass Rock (only for payment purposes where payment is on a unit quantity basis): Any material which cannot be excavated with a single-tooth ripper drawn by a crawler tractor having a minimum draw bar pull rated at not less than 56,000 pounds (comparable to Caterpillar D 8K or comparable to Caterpillar 973 front-end loader, and occupying an original volume of at least one cubic yard). The Peachtree City Project Manager shall be the sole determinate as to the limits to which the material is classified as rock.

B. Definition of Trench Rock (only for payment purposes where payment is on a unit quantity basis): Any material which cannot be excavated with a backhoe having a bucket curling force rated at not less than 25,700 pounds (Caterpillar Model 225 or equivalent), and occupying an original volume of at least one-half (1/2) cubic yards.

C. Excavation: Where rock is encountered within excavation for structures, it shall be excavated to the lines and grades indicated on the Drawings or as otherwise directed by the Peachtree City Project Manager. The Contractor shall be responsible for obtaining any blasting permits required.

D. Blasting: No blasting will be allowed except via written authorization of the Peachtree City Project Manager. If allowed, blasting operations shall be conducted in accordance with all existing ordinances and regulations. All structures shall be protected from the effects of the blast. Blasting shall be performed and supervised by qualified and licensed workers. Dispose of excavated rock in accordance with applicable federal, state, county and local regulations. All blasting within 750 ft of an inhabited structure and or roadway must be siesmic monitored for ground and air vibrations. Peak Particle Velocity shall be measured at nearest structure and shall be 0.5 inch per second or less during blasts. Shots must be covered with at least 6 feet of earthen and synthetic cover (blasting mats). Bore hole diameter must not exceed 4” in diameter. Blast hole cannot exceed 20 feet of solid rock with single delay detonator (in terms, if drill depth exceeds more than 20 feet in depth, decking must be done, accomplish by using multiple detonators in the blast hole. The blast holes must be stemmed with gravel, 89/57 stone. Pre-blast inspections are required. Inspections shall be

via an engineer that includes inspection of structure, and pictures of any existing damage or cracks that structure may have prior to blasting.

E. If excess excavation is made or the material becomes disturbed so as to require removal below final subgrade elevations or beyond the prescribed limits, the resulting space shall be refilled with concrete in accordance with Section 2.08 of this Specification

F. Measurement for Payment

All rock excavation shall be paid for as an incidental part of the item on which the work is done except where a separate, unqualified item for rock excavation is indicated in the BID FORM or where rock excavation is ORDERED as an EXTRA by the OWNER, by WRITTEN ORDER. Where payment for rock excavation is established by the BID FORM or ORDERED as an EXTRA by the OWNER, CONTRACTOR shall be paid only for the quantity of rock removed, measured as follows:

A. For all masonry structures such as buildings, tanks, vaults, catch basins, manholes and the like, the horizontal rock measurement shall be made to include 2-1/2 feet from the outside face of finished vertical sidewall of such structure and the vertical rock measurement shall be made from the top elevation of the rock, before disturbed or removed, to the elevation of the under or lower side of the bottom concrete slab of the structure. Any projection below the bottom slab of any structure required for sump, well, or other pertinent construction shall be measured separately.

B. For installation of pipe lines and fittings the horizontal rock measurement shall be the nominal outside diameter of the pertinent pipe plus 16-inches, except, however, that no horizontal measurement shall be considered to be less than 27-inches; the vertical rock measurement shall be made from the top elevation of the rock, before disturbance or removal, to an elevation of 9-inches below the bottom outside surface of the pipe for pipe having a diameter of 8-inches through 24-inches, and to an elevation of 12-inches below the bottom outside surface of the pipe for all pipe having a diameter greater than 24-inches.

G. Excess Rock Excavation

If rock excavated beyond the limits of payment indicated on the Drawings, specified, or authorized in writing by the OWNER, the excess excavation whether resulting from overbreakage or other causes, shall be backfilled, by and at the expense of the CONTRACTOR.

H. Shattered Rock

If rock below normal depth is shattered due to drilling or blasting operations and such shattered rock is unfit for foundations, the shattered rock shall be removed and the excavation shall be backfilled as described above in EXCESS ROCK EXCAVATION. All such removal and backfilling shall be done at the expense of

the CONTRACTOR.

3.05 SHEETING, BRACING AND SHORING

A. Trench Shield: A trench shield or box may be used to support the trench walls. The use of a trench shield does not necessarily preclude the additional use of bracing and sheeting. When trench shields are used, care must be taken to avoid disturbing the alignment and grade of the pipe or disrupting the haunching of the pipe as the shield is moved. When the bottom of the trench shield extends below the top of the pipe, the trench shield will be raised in 6-inch increments with specified backfilling occurring simultaneously. At no time shall the trench shield be "dragged" with the bottom of the shield extending below the top of the pipe or utility.

B. Remove bracing and sheeting in units when backfill reaches the point necessary to protect the utility and adjacent property. Leave sheeting in place when in the opinion of the Peachtree City Project Manager it cannot be safely removed or is within three feet of an existing structure, utility, or pipeline. Cut off any sheeting left in place at least two feet below the surface.

C. Sheet piling within three feet of an existing structure or utility shall remain in place, unless otherwise directed by the Peachtree City Project Manager.

3.06 TRENCH FOUNDATION AND STABILIZATION

A. The bottom of the trench shall provide a foundation to support the utility and its specified bedding. The trench bottom shall be graded to support the utility and bedding uniformly throughout its length and width.

B. If, after dewatering as specified above, the trench bottom is spongy, or if the trench bottom does not provide firm, stable footing and the material at the bottom of the trench will still not adequately support the utility, the trench will be determined to be unsuitable.

C. If in the opinion of the Peachtree City Project Manager the undisturbed material at the trench bottom constitutes an unstable pipe foundation, then the Contractor shall replace such unstable materials with crushed stone.

D. If the crushed stone does not provide adequate foundation, then the trench shall be excavated to a depth of at least two feet below the specified trench bottom. The over excavation shall be filled with No. 4 foundation stone to the bottom of the bedding stone or the over excavation shall be lined with filter fabric, with the fabric being supported along the sides of the trench to a point above the top of the utility. The trench shall then be filled with No. 57 foundation stone to the top of the pipe and the filter fabric shall be overlapped above the pipe and stone.

3.07 BEDDING AND HAUNCHING

A. Prior to placement of bedding material, the trench bottom shall be free of any water, loose rocks, boulders or large dirt clods.

B. Bedding material shall be placed to provide uniform support along the bottom of the pipe and to maintain the pipe at the proper elevation. The initial layer of bedding placed to receive the pipe shall be brought to the grade and dimensions indicated on the Drawings. All bedding shall extend the full width of the trench bottom. The pipe shall be placed and brought to grade by tamping the bedding material or by removal of the excess amount of the bedding material under the pipe. Adjustment to grade line shall be made by scraping away or filling with bedding material. Wedging or blocking up of pipe shall not be permitted. Applying pressure to the top of the pipe, such as with a backhoe bucket, to lower the pipe to the proper elevation or grade shall not be permitted. Each pipe section shall have a uniform bearing on the bedding for the length of the pipe, except at joints.

C. At each joint, excavate bell holes of ample depth and width to permit the joint to be assembled properly and to relieve the pipe bell of any load.

D. After the pipe section is properly placed, add the haunching material to the specified depth. The haunching material shall be shovel sliced, tamped, vigorously chinked or otherwise consolidated to provide uniform support for the pipe barrel and to fill completely the voids under the pipe, including the bell hole. Prior to placement of the haunching material, the bedding shall be clean and free of any water, loose rocks, boulders or dirt clods.

E. Gravity Pipelines and Accessories: Lay PVC (plastic pipe) gravity sewer pipe with minimum Class B bedding. Lay all other gravity sewer pipelines with Class C bedding, unless shown or specified otherwise. All trenches under paving, concrete, etc. shall be placed in Class B bedding only.

F. Bedding for storm drain piping shall be as specified in Section 33 40 00 Storm Drainage Piping.

G. Manholes: Excavate to a minimum of 12-inches below the planned elevation of the base of the manhole. Place and compact crushed stone bedding material to the required grade before constructing the manhole.

H. Pressure Mains

Bedding and haunching for pressure pipe shall be with Class II or III soils compacted to 90% of standard proctor density. All trenches under paving, concrete, etc. shall be placed in Class B bedding only.

I. Excessive Width and Depth

1. If the trench is excavated in excess of the pipe diameter plus two feet, provide the next higher bedding type.

2. If the trench is excavated to excessive depth, provide foundation stone to the bottom of the bedding material.

J. Compaction: Bedding and haunching materials under pipe, manholes and accessories shall be compacted to a minimum of 95 percent of the maximum dry

density, unless shown or specified otherwise.

3.08 CONCRETE ENCASEMENT FOR PIPELINES

Where concrete encasement is shown on the Drawings for pipelines not under structures, excavate the trench to provide a minimum of 6-inches clearance from the bell of the pipe. Lay the pipe to line and grade on concrete blocks. In lieu of bedding, haunching and initial backfill, place concrete to the full width of the trench and to a height of not less than 6-inches above the pipe bell. Do not backfill the trench for a period of at least 24 hours after concrete is placed.

3.09 CONCRETE ENCASEMENT FOR ELECTRICAL DUCT BANKS

A. Install top of duct bank minimum 18-inches below finished grade with plastic warning tape 12-inches below finished grade.

B. Terminate conduit in end bell at manhole entries.

C. Stagger conduit joints in concrete encasement 6-inches minimum.

D. Provide minimum 3-inch concrete cover at bottom, top, and sides of duct bank. Use suitable separators and chairs installed not greater than four feet on center to provide conduit spacing as indicated. Securely anchor conduit to prevent movement during concrete placement.

E. Where duct bank passes beneath footings or slabs, excavate to provide a minimum of 6-inches clearance between the conduits and the structure. Backfill to the base of the structure with concrete.

3.10 INITIAL BACKFILL

A. Fill up to subgrade elevations unless otherwise indicated.

B. Employ a placement method that does not disturb or damage other work.

C. Systematically fill to allow maximum time for natural settlement. Do not fill over porous, wet, frozen or spongy subgrade surfaces.

D. Maintain optimum moisture content of fill materials to attain required compaction density.

E. Granular Fill: Place and compact materials in equal continuous layers not exceeding 6 inches compacted depth.

F. Soil Fill: Place and compact material in equal continuous layers not exceeding 8 inches compacted depth.

G. Correct areas that are over-excavated.

1. Thrust bearing surfaces: Fill with concrete.

2. Other areas: Use general fill, flush to required elevation, compacted to

minimum 98 percent of standard proctor dry density.

H. Compaction Density Unless Otherwise Specified or Indicated:

1. Under paving, slabs-on-grade, and similar construction: 98 percent of standard proctor density.

2. At other locations: 95 percent of standard proctor density.

3.11 FINAL BACKFILL

A. Backfill to contours and elevations indicated using suitable materials.

B. Employ a placement method that does not disturb or damage other work.

C. Systematically fill to allow maximum time for natural settlement. Do not fill over porous, wet, frozen or spongy subgrade surfaces.

D. Maintain optimum moisture content of fill materials to attain required compaction density.

E. Granular Fill: Place and compact materials in equal continuous layers not exceeding 6 inches compacted depth.

F. Soil Fill: Place and compact material in equal continuous layers not exceeding 8 inches compacted depth.

G. Slope grade away from building minimum 2 inches in 10 ft, unless noted otherwise. Make gradual grade changes. Blend slope into level areas.

H. Compaction Density Unless Otherwise Specified or Indicated:

1. Under paving, slabs-on-grade, and similar construction: 98 percent of standard proctor density.

2. At other locations: 95 percent of standard proctor density.

I. Reshape and re-compact fills subjected to vehicular traffic.

3.12 TOLERANCES

A. Top Surface of General Backfilling: Plus or minus 1 inch from required elevations.

B. Top Surface of Backfilling Under Paved Areas: Plus or minus 1 inch from required elevations.

3.13 CLEAN-UP

A. Leave unused materials in a neat, compact stockpile.

B. Remove unused stockpiled materials, leave area in a clean and neat condition. Grade stockpile area to prevent standing surface water.

C. Leave borrow areas in a clean and neat condition. Grade to prevent standing

surface water.

END OF SECTION

SECTION 32 11 00

BASE COURSES

PART 1 GENERAL

1.01 SCOPE

Work covered by this section consists of furnishing all plant, labor, equipment and materials, and performing all operations in connection with the construction of graded aggregated base and binder course as shown on the plans or as required for paved areas. Material and construction shall be in conformance with requirements of the Georgia Department of Transportation, Standard Specifications, Construction of Roads and Bridges, latest edition. (D.O.T.S.S.)

1.02 RELATED SECTIONS

A. Section 31 20 00 – Earth Moving.

B. Section 32 12 00 - Flexible Paving.

PART 2 MATERIALS

2.01 GRADED AGGREGATE:

Shall meet the requirements of Article 815 of D.O.T.S.S.

2.02 BITUMINOUS PRIME

A. D.O.T.S.S., Section 412.

B. Bituminous Prime shall be included in the unit price bid for Graded Aggregate Base Course.

PART 3 EXECUTION

3.01 PREPARATION

The area to be paved shall be graded and shaped, as required to construct the base in conformance with the grades, lines, thicknesses, and typical cross-section shown within the limits of construction. Prior to installing graded aggregate base, the subgrade shall be test rolled in accordance with D.O.T.S.S., Section 221. An Engineer shall be present to inspect

during the test rolling. Any subgrade displacing over 1/4" shall be corrected and made stable before construction proceeds. Construction of base will not begin until all subsurface utilities have been installed.

3.02 INSTALLATION

Graded aggregate shall be installed in accordance with Section 310, D.O.T.S.S.

3.03 COMPACTION

After shaping the spread material to line, grade, and cross-section, roll to uniformly compact the course. Use Group 2 aggregate and roll to at least 100 percent of the maximum dry density. Regardless of compaction, ensure that the compacted base is sufficiently stable to support construction equipment without pumping. If the base material is unstable from too much moisture, dry and rework the base material.

3.04 FINISHING

After compaction, the surface of the base shall be shaped to the required lines, grades, and cross-section as shown on plans or as directed by the Engineer.

3.05 MAINTENANCE

The Contractor shall be required, within the limits of his contract, to maintain the base course in good condition until all work has been completed and accepted. Maintenance shall include immediate repairs of any defects that may occur. This work shall be done by the Contractor at his own expense and repeated as often as may be necessary to keep the area continuously intact. Faulty work shall be replaced for the full depth of treatment. Any low areas shall be remedied by replacing the material for the full depth of treatment rather than by adding a thin layer to the completed work.

3.06 TOLERANCES

The surface of the completed base shall not show any deviation in excess of 1/4" when tested with a 10' string line. The completed thickness of the base shall be within 1/2" of the thickness indicated.

3.07 WARRANTY

The Contractor shall warrant the base to be serviceable for a minimum period of one year after the date of acceptance of the job.

END OF SECTION

SECTION 32 12 00

FLEXIBLE PAVING

PART 1 GENERAL

1.01 SECTION INCLUDES

A. Aggregate base course.

B. Single course bituminous concrete paving.

C. Double course bituminous concrete paving.

D. Surface sealer.

1.02 RELATED SECTIONS

A. Section 33 05 13 - Manholes and Structures

B. Section 32 11 00 – Base Courses

1.03 SUBMITTALS

A. Material Certificates: Provide copies of materials certificates signed by material producer and Contractor, certifying that each material item complies with, or exceeds, specified requirements.

B. Mix Design: Submit proposed mix design for each type of asphalt for review and acceptance prior to begging work.

1.04 REFERENCES

A. AI MS-2 - Mix Design Methods for Asphalt Concrete and Other Hot-Mix Types; The Asphalt Institute; latest edition.

B. AI MS-19 - A Basic Asphalt Emulsion Manual; The Asphalt Institute; latest edition.

C. ASTM D 946 - Standard Specification for Penetration-Graded Asphalt Cement for Use in Pavement Construction; 1982 (Reapproved 1999) or latest edition.

D. Georgia Department of Transportation Standard Specifications Construction of Roads and Bridges; latest edition.

1.05 SITE CONDITIONS

A. Weather Limitations:

1. Apply prime and tack coats when ambient temperature is above 50 deg. F (10 deg. C), and when temperature has not been below 35 deg. F (1 deg. C) for 12 hours immediately prior to application. Do not apply when base is wet or contains an excess of moisture.

2. Construct asphalt concrete surface course when atmospheric temperature is above 40 deg. F (4 deg. C), and when base is dry. Base course may be placed when air temperature is above 30 deg. F (-1 deg. C) and rising.

B. Grade Control: Establish and maintain required lines and elevations.

1.06 QUALITY ASSURANCE

A. Perform Work in accordance with Georgia Department of Transportation (GDOT) standard specifications, latest edition.

B. Mixing Plant: Conform to GDOT standard specifications, latest edition.

C. Obtain materials from same source throughout.

1.07 REGULATORY REQUIREMENTS

Conform to applicable code for paving work on public property.

PART 2 PRODUCTS

2.01 MATERIALS

A. Asphalt Cement: GDOT Section 400, ASTM D 946.

B. Aggregate for Base Course: GDOT Standards. Section 802

C. Aggregate for Binder Course: In accordance with GDOT standards. Section 802.

D. Aggregate for Wearing Course: In accordance with GDOT standards. Section 802.

E. Fine Aggregate: In accordance with GDOT standards. Section 802

F. Mineral Filler: Finely ground particles of limestone, hydrated lime or other mineral dust, free of foreign matter.

G. Primer: In accordance with GDOT standards, AASHTO M 82 (ASTM D 2027) MC-30, MC-70 or MC-250 .

H. Tack Coat: Homogeneous, medium curing, liquid asphalt. Conforming to Section 413 of the Georgia Department of Transportation Standard Specification.

2.02 ASPHALT PAVING MIXES AND MIX DESIGN

A. Use dry material to avoid foaming. Mix uniformly.

B. Base Course: 8” Graded Aggregate Base (GAB).

C. Binder Course: 2.5” (220 lb/sy) 19 mm Superpave or as directed by the Peachtree City Project Manager.

D. Wearing Course: 1.5” (220 lb/sy) 12.5 mm Superpave or as directed by the Peachtree City Project Manager.

E. Submit proposed mix design of each class of mix for review prior to beginning of work.

2.03 SOURCE QUALITY CONTROL

Test mix design and samples in accordance with AI MS-2.

PART 3 EXECUTION

3.01 EXAMINATION

A. Verify that compacted subgrade is dry and ready to support paving and imposed loads.

B. Verify gradients and elevations of base are correct.

3.02 BASE COURSE

A. Place and compact base course and demonstrate satisfactory proof roll prior to proceeding with asphalt work.

B. Section 32 11 00 - Base Courses forms the base construction for work of this section.

3.03 PREPARATION - PRIMER

A. Apply primer in accordance with manufacturer's instructions.

B. Apply primer on aggregate base or subbase at uniform rate of 0.15 to 0.30 gal/sy.

C. Apply primer to contact surfaces of curbs, gutters, and existing asphalt.

D. Use clean sand to blot excess primer.

3.04 PREPARATION - TACK COAT

A. Apply tack coat in accordance with manufacturer's instructions.

B. Apply tack coat on asphalt or concrete surfaces over subgrade surface at uniform rate of 0.05 to 0.10 gal/sy.

C. Apply tack coat to contact surfaces of curbs, gutters and existing asphalt.

D. Coat surfaces of manhole frames with oil to prevent bond with asphalt pavement. Do not tack coat these surfaces.

3.05 PLACING ASPHALT PAVEMENT

A. General: Place asphalt concrete mixture on prepared surface, spread and strike-off. Spread mixture at minimum temperature of 280 to 325 degrees F. Place inaccessible and small areas by hand. Place each course to required grade, cross-section, and compacted thickness. Place asphalt binder course approximately 72 hours after applying primer.

B. Joints: Make joints between old and new pavements, or between successive days' work, to ensure continuous bond between adjoining work. Construct joints to have same texture, density and smoothness as other sections of asphalt concrete course. Clean contact surfaces and apply tack coat.

C. Place binder course to 2 inch compacted thickness, or as shown on the plans.

D. Place wearing course to 2 inches compacted thickness, or as shown on the plans.

E. Install gutter drainage grates and frames in correct position and elevation.

3.06 ROLLING

A. Begin rolling when mixture will bear roller weight without excessive displacement.

B. Compact mixture with hot hand tampers or vibrating plate compactors in areas inaccessible to rollers.

C. Accomplish breakdown or initial rolling immediately following rolling of joints and outside edge. Check surface after breakdown rolling, and repair displaced areas by loosening and filling, if required, with hot material.

D. Follow breakdown rolling as soon as possible, while mixture is hot. Continue second rolling until mixture has been thoroughly compacted.

E. Perform finish rolling while mixture is still warm enough for removal of roller marks. Continue rolling until roller marks are eliminated and course has attained maximum density.

F. Remove and replace paving areas mixed with foreign materials and defective areas. Cut-out such areas and fill with fresh, hot asphalt concrete. Compact by rolling to maximum surface density and smoothness.

G. After final rolling, do not permit vehicular traffic on pavement until it has cooled and hardened.

H. Erect barricades to protect paving from traffic until mixture has cooled enough not to become marked.

3.07 WHEEL STOPS

Secure wheel stops to asphalt concrete surface with not less than two 3/4" diameter galvanized steel dowels embedded in precast concrete at 1/3 points. Size length of dowel to penetrate at least 6" into asphalt concrete. Drill placement holes oversize and embed dowels in hot bituminous grout material.

3.08 REMOVE AND REPLACE PAVEMENT

Pavement and base course which must be removed for constructing sewers, manholes, force mains, water lines, and all other appurtenances in streets shall be replaced with the paving section shown on the drawings or match the existing pavement section. The pavement shall be removed to neat lines cut by a masonry saw. The top 18 inches of subgrade material immediately under the paving base and also road should shall be carefully removed and kept separate from the rest of the excavated material. This material shall be placed in the top 18 inches of the backfill. Further compaction shall be accomplished by leaving the backfilled trench open to traffic while maintaining the surface with crushed stone or gravel. Settlement in trenches shall be refilled with crushed stone or gravel, and such maintenance shall continue until replacement of pavement.

3.09 TOLERANCES

A. Flatness: Maximum variation of 1/4 inch (6 mm) measured with 10-foot (3 m) straight edge.

B. Compacted Thickness: Within 1/4 inch (6 mm) of specified or indicated thickness.

C. Variation from True Elevation: Within 1/2 inch (12 mm).

3.10 FIELD QUALITY CONTROL

A. See Section 01 45 29 – Testing Laboratory Services.

B. Thickness: In-place compacted thickness of hot-mix asphalt courses will be determined according to ASTM D 3549. In-place compacted thickness will not be acceptable if exceeding following allowable variation from required thickness:

1. Base Course: 1/2", plus or minus.
2. Surface Course: 1/4", plus or minus.
3. Surface Smoothness: Test finished surface of each asphalt concrete course for smoothness, using 10' straightedge applied parallel with, and at right angles to centerline of paved area. Surfaces will not be acceptable if exceeding the following tolerances for smoothness.
4. Base Course Surface: 1/2".

5. Wearing Course Surface: 1/4".

6. Crowned Surfaces: Test with crowned template centered and at right angle to crown. Maximum allowable variance from template, 1/4".

7. Check surface areas at intervals as directed by Peachtree City Project Manager.

C. Provide field inspection and testing. Take samples and perform tests in accordance with AI MS-2. The density shall be at least 98% (ninety-eight percent) of the laboratory determined density.

D. In-Place Density: Testing agency will take samples of uncompacted paving mixtures and compacted pavement according to [**ASTM D 979**] [**or**] [**AASHTO T 168**].

1. Reference maximum theoretical density will be determined by averaging results from four samples of hot-mix asphalt-paving mixture delivered daily to site, prepared according to ASTM D 2041, and compacted according to job-mix specifications.

2. In-place density of compacted pavement will be determined by testing core samples according to ASTM D 1188 or ASTM D 2726.One core sample will be taken for every 1000 sq. yd. (836 sq. m) or less of installed pavement, with no fewer than 4 cores taken or as directed by the Peachtree City Project Manager.

3. Or a field density of in-place compacted pavement may be determined by nuclear method according to ASTM D 2950 and correlated with ASTM D 1188 or ASTM D 2726.

3.11 PROTECTION

Immediately after placement, protect pavement from mechanical injury for 1 days or until surface temperature is less than 140 degrees F (60 degrees C).

END OF SECTION

SECTION 32 13 13

CONCRETE PAVING

PART 1 GENERAL

1.1 RELATED DOCUMENTS

A. Drawings and general provisions of the Contract, including General and Supplementary Conditions and Division 01 Specification Sections, apply to this Section.

1.2 SUMMARY

A. This Section includes exterior cement concrete pavement for the following:

1. Curbs and Gutters.
2. Walkways.
3. Residential Driveways
4. Parking Lots

B. Related Sections include the following:

1. Division 31 Section "Earth Moving" for subgrade preparation, grading, and subbase course.
2. Division 32 Section "Concrete Paving Joint Sealants" for joint sealants of joints in concrete pavement and at isolation joints of concrete pavement with adjacent construction.

1.3 DEFINITIONS

A. Cementitious Materials: Portland cement alone or in combination with one or more of blended hydraulic cement, fly ash and other pozzolans, and ground granulated blast-furnace slag.

1.4 SUBMITTALS

A. Product Data: For each type of manufactured material and product indicated.

B. Design Mixtures: For each concrete pavement mixture. Include alternate mixture designs when characteristics of materials, Project conditions, weather, test results, or other circumstances warrant adjustments.

C. Material Certificates: Signed by manufacturers certifying that each of the following materials complies with requirements:

1. Cementitious materials.
2. Steel reinforcement and reinforcement accessories.
3. Fiber reinforcement.
4. Admixtures.
5. Curing compounds.
6. Bonding agent or epoxy adhesive.
7. Joint fillers.

1.5 QUALITY ASSURANCE

A. Manufacturer Qualifications: Manufacturer of ready-mixed concrete products who complies with ASTM C 94/C 94M requirements for production facilities and equipment.

1. Manufacturer certified according to NRMCA's "Certification of Ready Mixed Concrete Production Facilities."

B. ACI Publications: Comply with ACI 301, "Specification for Structural Concrete," unless modified by requirements in the Contract Documents.

1.6 PROJECT CONDITIONS

A. Traffic Control: Maintain access for vehicular and pedestrian traffic as required for other construction activities.

PART 2 - PRODUCTS

2.1 MANUFACTURERS

A. In other Part 2 articles where titles below introduce lists, the following requirements apply to product selection:

1. Available Products: Subject to compliance with requirements, products that may be incorporated into the Work include, but are not limited to, products specified.
2. Available Manufacturers: Subject to compliance with requirements, manufacturers offering products that may be incorporated into the Work include, but are not limited to, manufacturers specified.

2.2 FORMS

A. Form Materials: Plywood, metal, metal-framed plywood, or other approved panel-type materials to provide full-depth, continuous, straight, smooth exposed surfaces.

1. Use flexible or curved forms for curves with a radius 100 feet (30.5 m) or less.

B. Form-Release Agent: Commercially formulated form-release agent that will not bond with, stain, or adversely affect concrete surfaces and will not impair subsequent treatments of concrete surfaces.

2.3 STEEL REINFORCEMENT

A. Plain-Steel Welded Wire Reinforcement: ASTM A 185, fabricated from as-drawn steel wire into flat sheets.

B. Reinforcing Bars: ASTM A 615/A 615M, Grade 60 (Grade 420); deformed.

C. Joint Dowel Bars: Plain steel bars, ASTM A 615/A 615M, Grade 60 (Grade 420). Cut bars true to length with ends square and free of burrs.

D. Tie Bars: ASTM A 615/A 615M, Grade 60 (Grade 420), deformed.

E. Bar Supports: Bolsters, chairs, spacers, and other devices for spacing, supporting, and fastening reinforcing bars, welded wire reinforcement, and dowels in place. Manufacture bar supports according to CRSI's "Manual of Standard Practice" from steel wire, plastic, or precast concrete of greater compressive strength than concrete, and as follows:

F. Epoxy Repair Coating: Liquid two-part epoxy repair coating, compatible with epoxy coating on reinforcement.

2.4 CONCRETE MATERIALS

A. Cementitious Material: Use the following cementitious materials, of the same type, brand, and source throughout the Project:

1. Portland Cement: ASTM C 150, Type I/II, gray.

B. Normal-Weight Aggregates: ASTM C 33, Class 4S 4M or 1N coarse aggregate, uniformly graded. Provide aggregates from a single source.

1. Maximum Coarse-Aggregate Size: 3/4 inch (19 mm) nominal.

2. Fine Aggregate: Free of materials with deleterious reactivity to alkali in cement.

C. Exposed Aggregate: Selected, hard, and durable; washed; free of materials with deleterious reactivity to cement or that cause staining; from a single source, with gap-graded coarse aggregate as follows:

1. Aggregate Sizes: 3/4 to 1 inch (19 to 25 mm) nominal.

D. Water: ASTM C 94/C 94M.

E. Air-Entraining Admixture: ASTM C 260.

F. Chemical Admixtures: Provide admixtures certified by manufacturer to be compatible with other admixtures and to contain not more than 0.1 percent water-soluble chloride ions by mass of cementitious material.

1. Water-Reducing Admixture: ASTM C 494/C 494M, Type A.

2. Retarding Admixture: ASTM C 494/C 494M, Type B.

3. Water-Reducing and Retarding Admixture: ASTM C 494/C 494M, Type D.

4. High-Range, Water-Reducing Admixture: ASTM C 494/C 494M, Type F.

5. High-Range, Water-Reducing and Retarding Admixture: ASTM C 494/C 494M, Type G.

6. Plasticizing and Retarding Admixture: ASTM C 1017/C 1017M, Type II.

2.5 FIBER REINFORCEMENT

A. Synthetic Fiber: Monofilament or fibrillated polypropylene fibers engineered and designed for use in concrete pavement, complying with ASTM C 1116, Type III, 1/2 to 1-1/2 inches (13 to 38 mm) long.

2.6 CURING MATERIALS

A. Absorptive Cover: AASHTO M 182, Class 2, burlap cloth made from jute or kenaf, weighing approximately 9 oz./sq. yd. (305 g/sq. m) dry.

B. Moisture-Retaining Cover: ASTM C 171, polyethylene film or white burlap-polyethylene sheet.

C. Water: Potable.

D. Evaporation Retarder: Waterborne, monomolecular film forming; manufactured for application to fresh concrete.

E. Clear Waterborne Membrane-Forming Curing Compound: ASTM C 309, Type 1, Class B.

F. White Waterborne Membrane-Forming Curing Compound: ASTM C 309, Type 2, Class B.

2.7 RELATED MATERIALS

A. Expansion- and Isolation-Joint-Filler Strips: ASTM D 1751, asphalt-saturated cellulosic fiber or ASTM D 1752, cork or self-expanding cork.

B. Slip-Resistive Aggregate Finish: Factory-graded, packaged, rustproof, nonglazing, abrasive aggregate of fused aluminum-oxide granules or crushed emery with emery aggregate containing not less than 50 percent aluminum oxide and not less than 20 percent ferric oxide; unaffected by freezing, moisture, and cleaning materials.

C. Bonding Agent: ASTM C 1059, Type II, non-redispersible, acrylic emulsion or styrene butadiene.

D. Epoxy Bonding Adhesive: ASTM C 881, two-component epoxy resin, capable of humid curing and bonding to damp surfaces, of class suitable for application temperature and of grade to requirements, and as follows:

1. Types I and II, non-load bearing or IV and V, load bearing, for bonding hardened or freshly mixed concrete to hardened concrete.

E. Pigmented Mineral Dry-Shake Hardener: Factory-packaged dry combination of portland cement, graded quartz aggregate, color pigments, and plasticizing admixture. Use color pigments that are finely ground, nonfading mineral oxides interground with cement.

2.8 PAVEMENT MARKINGS

A. Pavement-Marking Paint: Latex, waterborne emulsion, lead and chromate free, ready mixed, complying with FS TT-P-1952, with drying time of less than 45 minutes.

1. Color: White (parking striping, edging), Yellow (fire lane, traffic separation), Blue (handicapped) and As indicated.

2.9 WHEEL STOPS

A. Wheel Stops: Precast, air-entrained concrete, 2500-psi (17.2-MPa minimum compressive strength, 4-1/2 inches (115 mm) high by 9 inches (225 mm) wide by 72 inches (1820 mm) long. Provide chamfered corners and drainage slots on underside and holes for anchoring to substrate.

1. Dowels: Galvanized steel, 3/4-inch (19-mm) diameter, 10-inch (254-mm) minimum length.

2.10 CONCRETE MIXTURES

A. Prepare design mixtures, proportioned according to ACI 301, for each type and strength of normal-weight concrete determined by either laboratory trial mixes or field experience.

1. Use a qualified independent testing agency for preparing and reporting proposed concrete mixture designs for the trial batch method.

B. Proportion mixtures to provide normal-weight concrete with the following properties:

1. Compressive Strength (28 Days): 3000 psi (20.7 MPa).

2. Maximum Water-Cementitious Materials Ratio at Point of Placement: 0.45.

3. Slump Limit: 4 inches (100 mm), plus or minus 1 inch (25 mm).

C. Add air-entraining admixture at manufacturer's prescribed rate to result in normal-weight concrete at point of placement having an air content as follows:

1. Air Content: 6 percent plus or minus 1.5 percent for 1-inch (25-mm) nominal maximum aggregate size.

D. Limit water-soluble, chloride-ion content in hardened concrete to 0.15 percent by weight of cement.

E. Chemical Admixtures: Use admixtures according to manufacturer's written instructions.

F. Synthetic Fiber: Uniformly disperse in concrete mix at manufacturer's recommended rate, but not less than 1.0 lb/cu. yd. (0.60 kg/cu. m).

2.11 CONCRETE MIXING

A. Ready-Mixed Concrete: Measure, batch, and mix concrete materials and concrete according to ASTM C 94/C 94M[and ASTM C 1116. Furnish batch certificates for each batch discharged and used in the Work.

1. When air temperature is between 85 deg F (30 deg C) and 90 deg F (32 deg C), reduce mixing and delivery time from 1-1/2 hours to 75 minutes; when air temperature is above 90 deg F (32 deg C), reduce mixing and delivery time to 60 minutes.

PART 3 - EXECUTION

3.1 EXAMINATION

A. Examine exposed subgrades and subbase surfaces for compliance with requirements for dimensional, grading, and elevation tolerances.

B. Proof-roll prepared subbase surface below concrete pavements with heavy pneumatic-tired equipment to identify soft pockets and areas of excess yielding.

1. Completely proof-roll subbase in one direction and repeat in perpendicular direction. Limit vehicle speed to 3 mph (5 km/h).

2. Proof-roll with a loaded 10-wheel tandem-axle dump truck weighing not less than 15 tons (13.6 tonnes).

3. Subbase with soft spots and areas of pumping or rutting exceeding depth of 1/2 inch (13 mm) require correction according to requirements in Division 31 Section "Earth Moving."

C. Proceed with concrete pavement operations only after nonconforming conditions have been corrected and subgrade is ready to receive pavement.

3.2 PREPARATION

A. Remove loose material from compacted subbase surface immediately before placing concrete.

3.3 EDGE FORMS AND SCREED CONSTRUCTION

A. Set, brace, and secure edge forms, bulkheads, and intermediate screed guides for pavement to required lines, grades, and elevations. Install forms to allow continuous progress of work and so forms can remain in place at least 24 hours after concrete placement.

B. Clean forms after each use and coat with form-release agent to ensure separation from concrete without damage.

3.4 STEEL REINFORCEMENT

A. General: Comply with CRSI's "Manual of Standard Practice" for fabricating, placing, and supporting reinforcement.

B. Clean reinforcement of loose rust and mill scale, earth, ice, or other bond-reducing materials.

C. Arrange, space, and securely tie bars and bar supports to hold reinforcement in position during concrete placement. Maintain minimum cover to reinforcement.

D. Install welded wire reinforcement in lengths as long as practicable. Lap adjoining pieces at least one full mesh, and lace splices with wire. Offset laps of adjoining widths to prevent continuous laps in either direction.

E. Install fabricated bar mats in lengths as long as practicable. Handle units to keep them flat and free of distortions. Straighten bends, kinks, and other irregularities, or replace units as required before placement. Set mats for a minimum 2-inch (50-mm) overlap of adjacent mats.

3.5 JOINTS

A. General: Form construction, isolation, and contraction joints and tool edgings true to line with faces perpendicular to surface plane of concrete. Construct transverse joints at right angles to centerline, unless otherwise indicated.

1. When joining existing pavement, place transverse joints to align with previously placed joints, unless otherwise indicated.

B. Construction Joints: Set construction joints at side and end terminations of pavement and at locations where pavement operations are stopped for more than one-half hour unless pavement terminates at isolation joints.

1. Continue steel reinforcement across construction joints, unless otherwise indicated. Do not continue reinforcement through sides of pavement strips, unless otherwise indicated.

2. Provide tie bars at sides of pavement strips where indicated.

3. Butt Joints: Use bonding agent at joint locations where fresh concrete is placed against hardened or partially hardened concrete surfaces.

4. Doweled Joints: Install dowel bars and support assemblies at joints where indicated. Lubricate or asphalt-coat one-half of dowel length to prevent concrete bonding to one side of joint.

C. Isolation Joints: Form isolation joints of preformed joint-filler strips abutting concrete curbs, catch basins, manholes, inlets, structures, walks, other fixed objects, and where indicated.

1. Locate expansion joints at intervals of 40 feet (12.2 m), unless otherwise indicated.

2. Extend joint fillers full width and depth of joint.

3. Terminate joint filler not less than 1/2 inch (13 mm) or more than 1 inch (25 mm) below finished surface if joint sealant is indicated.

4. Place top of joint filler flush with finished concrete surface if joint sealant is not indicated.

5. Furnish joint fillers in one-piece lengths. Where more than one length is required, lace or clip joint-filler sections together.

6. Protect top edge of joint filler during concrete placement with metal, plastic, or other temporary preformed cap. Remove protective cap after concrete has been placed on both sides of joint.

D. Contraction Joints: Form weakened-plane contraction joints, sectioning concrete into areas as indicated. Construct contraction joints for a depth equal to at least one-fourth of the concrete thickness, as follows[to match jointing of existing adjacent concrete pavement:

1. Grooved Joints: Form contraction joints after initial floating by grooving and finishing each edge of joint with grooving tool to a 1/4-inch (6-mm) radius. Repeat grooving of contraction joints after applying surface finishes. Eliminate groover marks on concrete surfaces.

2. Sawed Joints: Form contraction joints with power saws equipped with shatterproof abrasive or diamond-rimmed blades. Cut 1/8-inch- (3-mm) wide joints into concrete when cutting action will not tear, abrade, or

otherwise damage surface and before developing random contraction cracks.

3. Doweled Contraction Joints: Install dowel bars and support assemblies at joints where indicated. Lubricate or asphalt coat one-half of dowel length to prevent concrete bonding to one side of joint.

E. Edging: Tool edges of pavement, gutters, curbs, and joints in concrete after initial floating with an edging tool to a 1/4-inch (6-mm) radius. Repeat tooling of edges after applying surface finishes. Eliminate tool marks on concrete surfaces.

3.6 CONCRETE PLACEMENT

A. Inspection: Before placing concrete, inspect and complete formwork installation, steel reinforcement, and items to be embedded or cast in. Notify other trades to permit installation of their work.

B. Remove snow, ice, or frost from subbase surface and reinforcement before placing concrete. Do not place concrete on frozen surfaces.

C. Moisten subbase to provide a uniform dampened condition at time concrete is placed. Do not place concrete around manholes or other structures until they are at required finish elevation and alignment.

D. Comply with ACI 301 requirements for measuring, mixing, transporting, and placing concrete.

E. Do not add water to concrete during delivery or at Project site, unless instructed to by testing agency.

F. Do not add water to fresh concrete after testing.

G. Deposit and spread concrete in a continuous operation between transverse joints. Do not push or drag concrete into place or use vibrators to move concrete into place.

H. Consolidate concrete according to ACI 301 by mechanical vibrating equipment supplemented by hand spading, rodding, or tamping.

1. Consolidate concrete along face of forms and adjacent to transverse joints with an internal vibrator. Keep vibrator away from joint assemblies, reinforcement, or side forms. Use only square-faced shovels for hand spreading and consolidation. Consolidate with care to prevent dislocating reinforcement, dowels, and joint devices.

I. Screed pavement surfaces with a straightedge and strike off.

J. Commence initial floating using bull floats or darbies to impart an open textured and uniform surface plane before excess moisture or bleed water appears on the surface. Do not further disturb concrete surfaces before beginning finishing operations or spreading surface treatments.

K. Curbs and Gutters: When automatic machine placement is used for curb and gutter placement, submit revised mix design and laboratory test results that meet

or exceed requirements. Produce curbs and gutters to required cross section, lines, grades, finish, and jointing as specified for formed concrete. If results are not approved, remove and replace with formed concrete.

L. Cold-Weather Placement: Comply with ACI 306.1 and as follows. Protect concrete work from physical damage or reduced strength that could be caused by frost, freezing actions, or low temperatures.

1. When air temperature has fallen to or is expected to fall below 40 deg F (4.4 deg C), uniformly heat water and aggregates before mixing to obtain a concrete mixture temperature of not less than 50 deg F (10 deg C) and not more than 80 deg F (27 deg C) at point of placement.

2. Do not use frozen materials or materials containing ice or snow.

3. Do not use calcium chloride, salt, or other materials containing antifreeze agents or chemical accelerators unless otherwise specified and approved in mix designs.

M. Hot-Weather Placement: Comply with ACI 301 and as follows when hot-weather conditions exist:

1. Cool ingredients before mixing to maintain concrete temperature below 90 deg F (32 deg C) at time of placement. Chilled mixing water or chopped ice may be used to control temperature, provided water equivalent of ice is calculated to total amount of mixing water. Using liquid nitrogen to cool concrete is Contractor's option.

2. Cover steel reinforcement with water-soaked burlap so steel temperature will not exceed ambient air temperature immediately before embedding in concrete.

3. Fog-spray forms, steel reinforcement, and subgrade just before placing concrete. Keep subgrade moisture uniform without standing water, soft spots, or dry areas.

3.7 FLOAT FINISHING

A. General: Do not add water to concrete surfaces during finishing operations.

B. Float Finish: Begin the second floating operation when bleed-water sheen has disappeared and concrete surface has stiffened sufficiently to permit operations. Float surface with power-driven floats, or by hand floating if area is small or inaccessible to power units. Finish surfaces to true planes. Cut down high spots and fill low spots. Refloat surface immediately to uniform granular texture.

1. Medium-to-Fine-Textured Broom Finish: Draw a soft bristle broom across float-finished concrete surface perpendicular to line of traffic to provide a uniform, fine-line texture.

3.8 SPECIAL FINISHES

A. Slip-Resistive Aggregate Finish: Before final floating, spread slip-resistive aggregate finish on pavement surface according to manufacturer's written instructions and as follows:

1. Uniformly spread 25 lb/100 sq. ft. (12 kg/10 sq. m) dampened slip-resistive aggregate over pavement surface in 2 applications. Tamp aggregate flush with surface using a steel trowel, but do not force below surface.

2. Uniformly distribute approximately two-thirds of slip-resistive aggregate over pavement surface with mechanical spreader, allow to absorb moisture, and embed by power floating. Follow power floating with a second slip-resistive aggregate application, uniformly distributing remainder of material at right angles to first application to ensure uniform coverage, and embed by power floating.

3. Cure concrete with curing compound recommended by slip-resistive aggregate manufacturer. Apply curing compound immediately after final finishing.

4. After curing, lightly work surface with a steel wire brush or abrasive stone and water to expose nonslip aggregate.

3.9 CONCRETE PROTECTION AND CURING

A. General: Protect freshly placed concrete from premature drying and excessive cold or hot temperatures.

B. Comply with ACI 306.1 for cold-weather protection.

C. Evaporation Retarder: Apply evaporation retarder to concrete surfaces if hot, dry, or windy conditions cause moisture loss approaching 0.2 lb/sq. ft. x h (1 kg/sq. m x h) before and during finishing operations. Apply according to manufacturer's written instructions after placing, screeding, and bull floating or darbying concrete, but before float finishing.

D. Begin curing after finishing concrete but not before free water has disappeared from concrete surface.

E. Curing Methods: Cure concrete by moisture curing, moisture-retaining-cover curing, curing compound, or a combination of these as follows:

1. Moist Curing: Keep surfaces continuously moist for not less than seven days with the following materials:

a. Water.

b. Continuous water-fog spray.

c. Absorptive cover, water saturated and kept continuously wet. Cover concrete surfaces and edges with 12-inch (300-mm) lap over adjacent absorptive covers.

2. Moisture-Retaining-Cover Curing: Cover concrete surfaces with moisture-retaining cover for curing concrete, placed in widest practicable width, with sides and ends lapped at least 12 inches (300 mm), and sealed by waterproof tape or adhesive. Immediately repair any holes or tears during curing period using cover material and waterproof tape.

3. Curing Compound: Apply uniformly in continuous operation by power spray or roller according to manufacturer's written instructions. Recoat areas subjected to heavy rainfall within three hours after initial application. Maintain continuity of coating and repair damage during curing period.

3.10 PAVEMENT TOLERANCES

A. Comply with tolerances of ACI 117 and as follows:

1. Elevation: 1/4 inch (6 mm).
2. Thickness: Plus 3/8 inch (10 mm), minus 1/4 inch (6 mm).
3. Surface: Gap below 10-foot- (3-m-) long, unleveled straightedge not to exceed 1/4 inch (6 mm).
4. Lateral Alignment and Spacing of Tie Bars and Dowels: 1 inch (25 mm).
5. Vertical Alignment of Tie Bars and Dowels: 1/4 inch (6 mm).
6. Alignment of Tie-Bar End Relative to Line Perpendicular to Pavement Edge: 1/2 inch (13 mm).
7. Alignment of Dowel-Bar End Relative to Line Perpendicular to Pavement Edge: Length of dowel 1/4 inch per 12 inches (6 mm per 300 mm).
8. Joint Spacing: 3 inches (75 mm).
9. Contraction Joint Depth: Plus 1/4 inch (6 mm), no minus.
10. Joint Width: Plus 1/8 inch (3 mm), no minus.

3.11 PAVEMENT MARKING

A. Do not apply pavement-marking paint until layout, colors, and placement have been verified with Architect.

B. Allow concrete pavement to cure for 28 days and be dry before starting pavement marking.

C. Sweep and clean surface to eliminate loose material and dust.

D. Apply paint with mechanical equipment to produce pavement markings of dimensions indicated with uniform, straight edges. Apply at manufacturer's recommended rates to provide a minimum wet film thickness of 15 mils (0.4 mm).

1. Spread glass beads uniformly into wet pavement markings at a rate of 6 lb/gal. (0.72 kg/L).

3.12 WHEEL STOPS

A. Securely attach wheel stops into pavement with not less than two galvanized steel dowels embedded in holes drilled or cast into wheel stops at one-quarter to one-third points. Firmly bond each dowel to wheel stop and to pavement. Securely install dowels into pavement and bond to wheel stop. Recess head of dowel beneath top of wheel stop.

3.13 FIELD QUALITY CONTROL

A. Testing Agency: Owner will engage a qualified independent testing and inspecting agency to perform field tests and inspections and prepare test reports.

B. Testing Services: Testing of composite samples of fresh concrete obtained according to ASTM C 172 shall be performed according to the following requirements:

1. Testing Frequency: Obtain at least 1 composite sample for each 50 cu. yd. (38 cu. m) or fraction thereof of each concrete mix placed each day.

2. Slump: ASTM C 143/C 143M; one test at point of placement for each composite sample, but not less than one test for each day's pour of each concrete mix. Perform additional tests when concrete consistency appears to change.

3. Air Content: ASTM C 231, pressure method; one test for each composite sample, but not less than one test for each day's pour of each concrete mix.

4. Concrete Temperature: ASTM C 1064; one test hourly when air temperature is 40 deg F (4.4 deg C) and below and when 80 deg F (27 deg C) and above, and one test for each composite sample.

5. Compression Test Specimens: ASTM C 31/C 31M; cast and laboratory cure one set of three standard cylinder specimens for each composite sample.

6. Compressive-Strength Tests: ASTM C 39/C 39M; test 1 specimen at 7 days and 2 specimens at 28 days.

a. A compressive-strength test shall be the average compressive strength from 2 specimens obtained from same composite sample and tested at 28 days.

C. Strength of each concrete mix will be satisfactory if average of any 3 consecutive compressive-strength tests equals or exceeds specified compressive strength and no compressive-strength test value falls below specified compressive strength by more than 500 psi (3.4 MPa).

D. Test results shall be reported in writing to Architect, concrete manufacturer, and Contractor within 48 hours of testing. Reports of compressive-strength tests shall contain Project identification name and number, date of concrete placement, name of concrete testing and inspecting agency, location of concrete batch in Work, design compressive strength at 28 days, concrete mixture proportions and materials, compressive breaking strength, and type of break for both 7- and 28-day tests.

E. Nondestructive Testing: Impact hammer, sonoscope, or other nondestructive device may be permitted by Architect but will not be used as sole basis for approval or rejection of concrete.

F. Additional Tests: Testing and inspecting agency shall make additional tests of concrete when test results indicate that slump, air entrainment, compressive strengths, or other requirements have not been met, as directed by Architect.

G. Remove and replace concrete pavement where test results indicate that it does not comply with specified requirements.

H. Additional testing and inspecting, at Contractor's expense, will be performed to determine compliance of replaced or additional work with specified requirements.

3.14 REPAIRS AND PROTECTION

A. Remove and replace concrete pavement that is broken, damaged, or defective or that does not comply with requirements in this Section.

B. Drill test cores, where directed by Architect, when necessary to determine magnitude of cracks or defective areas. Fill drilled core holes in satisfactory pavement areas with portland cement concrete bonded to pavement with epoxy adhesive.

C. Protect concrete from damage. Exclude traffic from pavement for at least 14 days after placement. When construction traffic is permitted, maintain pavement as clean as possible by removing surface stains and spillage of materials as they occur.

D. Maintain concrete pavement free of stains, discoloration, dirt, and other foreign material. Sweep concrete pavement not more than two days before date scheduled for Substantial Completion inspections.

END OF SECTION

SECTION 32 92 19

SEEDING

PART 1 GENERAL

1.01 SCOPE

This section pertains to seeding work, including preparing the seedbed, furnishing and placing of topsoil, seed and other required materials for a complete installation to the limits of construction and specified herein. Seeding operations shall be performed on all newly graded earth areas not otherwise specified covered by structures, pavements and/or surfacings, riprap, sod, sprigging, walkways, and other items of a similar nature; on all cleared and/or grubbed areas which are to remain as finish grade surfaces and not to be excavated or embankments constructed thereon; on all existing off site and on site turfed earth surfaces which are disturbed by construction operations and which are to remain as finish grade surfaces; and at all other locations which may be designated on the drawings or specified herein. The contractor shall follow the GA DOT Standard Specifications Construction of Roads and Bridges Section 700, 882, 890 and 891 latest edition and/or pages 6-35 thru 6-60 of the Manual for Erosion and Sediment Control in Georgia (1975 and as amended in the latest edition).

1.02 RELATED WORK SPECIFIED ELSEWHERE

A. Sodding – Section 32 92 23 (If Indicated on the Drawings)

PART 2 PRODUCTS

2.01 TOPSOIL

Top soil shall consist of materials meeting the requirements of Section 31 14 14.

2.02 GRASS SEED

All seeds shall be labeled in accordance with U.S.D.A. Rules and Regulations. Seeds shall be packaged in suitable containers in accordance with the Georgia Seed Laws, Rules and Regulations currently in effect. No seed shall be used which has become molded, wet or otherwise damaged. Seed shall be tested by the Georgia Department of Agriculture for the purity and germination within six months prior to the date of sowing.

1. Grass seed on level or slightly sloping ground shall consist of the following for the planting dates specified:

(a) March 1 to June 30

Common Bermuda (hulled)	10 lbs./acre
Tall Fescue	50 lbs./acre

(b) August 1 to November 1

Tall Fescue	50 lbs./acre
Common Bermuda (unhulled)	10 lbs./acre

(c) November 1 to March 1

Common Bermuda (unhulled)	10 lbs./acre

2. Grass seed on slopes 2:1 or steeper and infrequently mowed areas unless otherwise indicated shall consist of the following for the planting dates specified:

(a) March 1 to June 15

Weeping Lovegrass	5 lbs./acre
Sericea Lespedeza (scarified)	60 lbs./acre

(b) August 1 to November 1

Tall Fescue	50 lbs./acre
Sericea Lespedeza (unscarified)	75 lbs./acre

(c) November 1 to March 1

Common Bermuda (unhulled)	10 lbs./acre
Sericea Lespedeza (unscarified)	75 lbs./acre

When as directed by the Peachtree City Project Manager, an approved quick growing species of grass seed such as rye, Italian rye, millet or other cereal grass, shall be applied at a rate of 30 lbs./acre in conjunction with and in addition to the seed mixture specified above.

2.03 SPRIGS

Bermuda, common, healthy living stolons native to locality of project. Plant on day of removal from growing location. Plant sprigs from March 15 to July 15.

2.04 MULCH

A. Dry Mulch: Dry mulch shall be straw or hay, consisting of oat, rye or wheat straw, or of pangola, peanut, coastal Bermuda or Bahia grass hay. Only undeteriorated mulch which can be readily cut into the soil shall be used. Application rate shall be 2 ½ tons per acre.

B. Mulch for hydroseeding: This material shall consist of wood cellulose fiber applied at 500 lbs./acre with dye color equal to Weyerhauser Company, or Conway Corporation material used for "hydroseeding" and suitable for this purpose.

2.05 FERTILIZER

Fertilizer shall be of an accepted and approved commercial brand. Fertilizer shall be a ready mixed material containing the soil nutrients as specified and in a suitable form compatible with the equipment used to achieve uniform distribution of the fertilizer. The fertilizer mixture shall contain the following nutrients expressed in per cent of the total weight: 6% nitrogen, 12% available phosphoric acid, and 12% water soluble potash (6-12-12) analysis. Container tags shall have the name and address of the manufacturer, the brand name, net weight, and chemical composition of analysis. Fertilizer shall be applied at 1500 lbs./acre.

2.06 LIME

Agricultural lime shall be within the specifications of the Georgia Department of Agriculture. Ground limestone is calcitic or dolomitic limestone ground so that 90 percent of the material shall pass a 10-mesh sieve, not less that 50 percent will pass through a 50-mesh sieve and at least 25% shall pass a 100-mesh sieve. Lime shall be applied as indicated by soil test, or the rate of 1 to 2 tons per acre.

2.07 WATER

The water used in the grassing operations may be obtained from any approved spring, pond, lake, stream or municipal water system. The water shall be free of excess and harmful chemicals, acids, alkalies, or any substance which might be harmful to plant growth or obnoxious to traffic.

2.08 SOD

Shall be healthy living, disease and weed free grass that has been freshly cut.

PART 3 EXECUTION

3.01 HYDROSEEDING

A. The materials for grassing shall consist of a thoroughly mixed slurry of grass seed, fertilizer, lime and mulch as specified. The application rate for wood fiber mulch shall be approximately 500 lbs./acre. All materials shall be discharged within one hour after being combined in the hydroseeder.

B. Each kind of leguminous seed shall be inoculated separately with the appropriate commercial culture according to instructions of the manufacturer of the material. All inoculated seed shall be protected from the sun and shall be planted the same day it is inoculated.

C. Equipment for mixing and applying the slurry shall be especially designed for this purpose. It shall be capable of applying a uniform mixture over the entire area to be seeded. The slurry mixture shall be agitated during application to keep the ingredients

thoroughly mixed. A suitable metering device to determine the rate of application and assist in obtaining uniform coverage of the grassed areas shall be incorporated as part of the equipment.

D. Ground preparation for hydroseeding shall be the same as for conventional seeding.

E. Hydroseeding shall not be performed when windy weather prevents even distribution; when the prepared surface is crusted; or when the ground is frozen, wet or otherwise in a non-tillable condition.

3.02 CONVENTIONAL SEEDING

A. Grading and Shaping

Grade and shape to finish contours and to allow practical use of equipment.

B. Seedbed Preparation

1. Broadcast plantings:

   a. Tillage as a minimum shall: adequately loosen the soil to a depth of 4 to 6 inches; alleviate compaction; incorporate lime and fertilizer; smooth and firm the soil; allow for the proper placement of seed, sprigs, or plants; and allow for the anchoring of straw or hay mulch if a disk is to be used.

   b. Tillage may be done with any suitable equipment.

   c. Tillage may be done on the contour where feasible.

   d. On slopes too steep for the safe operation of tillage equipment, the soil surface will be pitted or trenched across the slope with appropriate hand tools to provide a place 6 to 8 inches apart in which seed may lodge and germinate.

2. Individual plants:

   a. Where individual plants are to be set, the soil will be well prepared by excavating holes, opening furrows, or dibble planting.

   b. For nursery stock plants, holes shall be large enough to accommodate roots without crowding.

3.03 SPRIGS

Separate or shred and broadcast over area prepared for planting at 40 cu. ft. per acre. Harrow into ground with disc turned straight.

3.04 LIME/FERTILIZER APPLICATION

Lime and fertilizer will be applied uniformly during land preparation so that it will be mixed with the soil during seedbed preparation. On steep surfaces, scarify slope prior to broadcasting lime and fertilizer.

3.05 PLANTING

A. Seeding will be done on a freshly prepared and firmed seedbed. For broadcast planting, use a cultipacker-seeder, drill, rotary seeder, other mechanical seeder, or hand seeding to distribute the seed uniformly over the area to be treated. Cover the seed lightly with a cultipacker or other suitable equipment.

B. No-till seeding is permissible into annual cover crops when planting is done following maturity of the cover crop or if the temporary cover stand is sparse enough to allow adequate growth of the permanent species.

C. No-till seeding must be done with appropriate no-till seeding equipment. The seed must be uniformly distributed and planted at the proper depth.

3.06 MULCHING

All seeded areas shall be mulched. Soil retention blankets, erosion control netting, and other manufactured materials may be required in addition to mulch on unstable soils and concentrated flow areas. Mulch shall be spread uniformly within 24 hours after seeding.

3.07 WATER, MAINTENANCE AND RESEEDING

A. Contractor shall be responsible for maintaining the proper moisture content of the soil to insure adequate plant growth until a satisfactory stand of grass is obtained. Watering shall be performed to maintain an adequate water content in the soil.

B. **The Contractor shall mow and maintain all seeded areas without additional payment until final acceptance of the work by the Owner, and any regrading, refertilizing, reliming, reseeding or remulching shall be done at his own expense.** Seeding work shall be repeated on defective areas until a satisfactory uniform stand of grass is accomplished. A satisfactory stand of grass is defined as grass that covers at least 98% of the total area with no bare spots larger than one square foot and bare spots shall be scattered such that bare areas do not comprise more than 1/100 of any given area. **Damage resulting from erosion, gulleys, washouts, or other causes shall be repaired by filling with topsoil, compacting, and repeating the seeding work at the Contractor's expense.**

3.08 SODDING

See Section 32 92 23 Sodding for additional sod requirements. Smooth grade the specified area to be planted. Apply amendments and fertilizer requirements as determined in soil test. Planting area shall be free of stumps, roots, large stone over 1" diameter, and any other

debris. Apply fertilizer and rake into the soil surface. Lightly wet soil surface if dry. Lay the sod at right angles to any major water flow. Sod shall be pinned and secured on slopes greater than 3:1. Sod joints shall be staggered between rows. Sod shall be watered after installation each day.

END OF SECTION

SECTION 32 92 23

SODDING

PART 1 GENERAL

1.01 SCOPE

Sodding shall consist of establishing disturbed areas with sod (designated on the plans or by the Peachtree City Project Manager). Sodding is to be used on golf course fairways, tee boxes and rough areas.

PART 2 PRODUCTS

2.01 SOD

Sod shall consist of a live, dense, well-rooted growth of Tiff 419 Bermuda or other specified species. The sod shall be free from Johnson grass, nut grass and other noxious grasses and weeds and shall be of suitable character for the purpose intended and for the soil in which it is to be planted. It shall be uninjured at the time of planting.

2.02 FERTILIZER

A. Fertilizer (10-10-10) used in connection with sodding, shall contain 10 percent nitrogen, 10 percent phosphoric acid and 10 percent potash. The fertilizer shall be furnished in standard containers with the name, weight and guaranteed analysis of the contents clearly marked. The containers shall ensure proper protection in handling and transporting the fertilizer. All commercial fertilizer shall comply with local, state and federal fertilizer laws.

B. Ammonium nitrate shall be a standard commercial product, shall conform to the requirements for other commercial fertilizers as specified above, and shall have a minimum of 32-1/2 percent nitrogen.

2.03 LIME

Agricultural lime shall be within the specifications of the Georgia Department of Agriculture. Ground limestone is calcitic or dolomitic limestone ground so that 90 percent of the material shall pass a 10-mesh sieve, not less that 50 percent will pass through a 50-mesh sieve and at least 25% shall pass a 100-mesh sieve. Lime shall be applied as indicated by soil test, or the rate of 1 to 2 tons per acre. Lime shall not be applied to soils to receive Centipede or St Augustine sod.

2.04 WEATHER LIMITATIONS

Sod shall be planted only when the soil is moist and favorable to growth.

PART 3 EXECUTION

3.01 SODDING

A. The area to be sodded shall be constructed to the limits of disturbed areas, as shown on the plans, or as directed by the Peachtree City Project Manager, and the surface loosened to a depth of not less than 4-inches with a rake or other device. If necessary, it shall be sprinkled until saturated at least 1-inch in depth and kept moist until the sod is place thereon. Immediately before placing the sod, the fertilizer shall be uniformly applied at the rate of 40 pounds of Grade 10-10-10, or equivalent, per 1,000 square feet. Agricultural limestone shall be applied based on soil tests or at a rate of 10 to 20 pounds per 1,000 square feet. Fertilizer, lime or other soil amendments shall be worked into the top 4 inches of soil.

B. The entire area shall be thoroughly covered with sod. The sod shall be placed on the prepared surface with the edges in close contact and, as far as possible, with staggered joints. If any gaps are present after placement, the contractor shall fill these areas with sand at no additional cost to the owner.

C. The sod shall be maintained moist from time of removal until reset but shall be placed as soon as practicable after removal from place where growing. Immediately after placing it shall be rolled with a lightweight roller or hand tamped to the satisfaction of the Peachtree City Project Manager.

D. Sod on slopes steeper than 3 to 1 shall be held in place by sod staples, driven through the sod into the soil until they are below the top of the sod.

3.02 WATERING AND MAINTENANCE

A. The sod shall be watered as directed by the Peachtree City Project Manager for a period of two weeks after which ammonium nitrate shall be applied at the rate of three pounds per 1,000 square feet and the sod given a final watering.

B. The Contractor shall not allow any equipment or material to be placed on any planted area and shall erect suitable barricades and guards to prevent Contractor's equipment, labor or the public from traveling on or over any area planted with sod.

C. It shall be the obligation of the Contractor to secure a satisfactory growth of grass before final acceptance of the Project.

D. The Contractor shall maintain all sodded areas without additional payment until final acceptance of the work by the Owner, and any regrading, refertilizing, reliming, resodding or remulching shall be done at his own expense. Sodding work shall be repeated on defective areas until a satisfactory uniform stand of sod

is accomplished. Damage resulting from erosion, gulleys, washouts, or other causes shall be repaired by filling with topsoil, compacting, and repeating the sodding work at the Contractor's expense.

END OF SECTION

SECTION 32 93 33

SHRUBS

PART 1 GENERAL

1.01 SCOPE

This Section includes furnishing all equipment, materials and labor necessary for soil preparation, planting of trees, shrubs, ground cover or vines as applicable, protection, maintenance, warranty and replacement of plants and all related items as shown on the Drawings and specified herein.

1.02 SUBSURFACE INVESTIGATION

Before commencing any work required by this Section, the Contractor shall ascertain the location of all utilities, subsurface drainage and underground construction so that proper precautions may be taken not to disturb or damage any subsurface improvements. The Contractor will be held responsible for making, at Contractor's expense, all repairs to damaged utilities, irrigation piping, irrigation control lines, and structures resulting from the work.

1.03 OBSTRUCTIONS BELOW GROUND OR OVERHEAD

It is not contemplated that planting shall occur where the depth of soil over underground construction or obstructions is insufficient to accommodate the roots or where impervious soil will require drainage. Where such conditions are encountered in excavation of planting areas, other locations for underground construction or for the planting may be designated by the Peachtree City Project Manager.

Removal of underground obstructions, relocation of construction and provision of drainage for planting areas shall be done only as directed by the Peachtree City Project Manager.

If changes in the location of the work or if removal of obstructions involve additional work, the Contractor shall proceed in accordance with the General Conditions of the Contract Documents.

1.04 QUALIFICATIONS

All planting shall be performed by personnel familiar with planting procedure and under the supervision of a qualified planting foreman.

1.05 EXISTING IMPROVEMENTS

The Contractor shall take all necessary precautions to avoid damage to existing sidewalks, fencing, paving, curbs, lighting, cart paths and other site improvements.

1.06 QUALITY ASSURANCE

Size quality, root ball preparation and grading standards shall conform to the American Association of Nurserymen, Inc., as published in the "American Standard for Nursery Stock" ANSI 260.1, latest approved revision.

The Contractor shall be responsible for all certificates of inspection of plant materials that may be required by federal, state or other authorities to accompany shipments of plants. All plants must be inspected and approved by the Peachtree City Project Manager before they are planted. Inspection and approval of plants upon delivery shall be for quality, size and variety only and shall not in any way impair the right of rejection for failure to meet other requirements during progress of the Work.

Fertilizer shall conform to the local, state and federal laws applicable to its manufacture and labeling.

1.07 WARRANTY

A. Warranty: Plant shall be alive, healthy and vigorous at the end of the one-year warranty period. The warranty period shall terminate at the end of the first full year after project completion.

B. Replacement: The Contractor shall inspect all planting monthly until the end of the maintenance period, and shall submit to the Peachtree City Project Manager a written report describing plant replacements, if any. Any plant required under this Contract that is dead or not in satisfactory growth will be removed from the site; these and any plants missing due to the Contractor's negligence shall be replaced as soon as conditions permit. In case of any question regarding the condition and satisfactory establishment of a rejected plant, the Contractor shall notify the Peachtree City Project Manager immediately in writing, and the Peachtree City Project Manager shall determine acceptability. All replacement plants shall be warranted for the duration of one full growing season as described above.

PART 2 PRODUCTS

2.01 TOPSOIL

The Contractor shall furnish, at no additional cost to the Owner, all necessary topsoil for the planting of trees, shrubs, vines, and/or ground covers. All topsoil shall be natural soil classifiable as a loam, silt loam or sandy loam as described in the U.S. Department of Agriculture triangular soil texture chart. The acidity range, between 6.0 and 6.5 pH, shall contain not less than three percent organic matter as determined by loss on ignition of

moisture-free samples dried at 100 degrees C. Topsoil shall be free from hard clods, stiff clay, hardpan, stones larger than 1-inch in diameter, noxious weeds and plants, sod, partially disintegrated debris, insects or any other undesirable material that would be toxic or harmful to growth. Topsoil for planting may be conditioned by the use of approved additives until the requirements outlined in the paragraph are satisfied.

2.02 PEAT

Peat shall be commercial Sphagnum peat moss containing not more than 15 percent moisture and not less than 60 percent decomposed organic matter by weight calculated on an oven-dried basis. It shall be clean, free from stones, sticks, roots and other foreign matter and shall be shredded. It shall be delivered to site in unopened, partially compressed bales or bags.

2.03 SAND

Sand for planting mix shall be clean, natural sand meeting the requirements of ASTM C 144. Sand may be prepared from stone, gravel or other inert material having similar characteristics subject to approval by the Peachtree City Project Manager.

2.04 MANURE

Manure shall be commercially composted horse or cow manure subject to approval by the Peachtree City Project Manager.

2.05 LIMESTONE

Limestone, if necessary as a soil additive shall be ground agricultural dolomitic limestone containing no less than 85 percent of total carbonates and shall be ground to such fineness that 50 percent will pass through a 100-mesh sieve and 90 percent through a 20 percent sieve.

2.06 PLANTING MIX

A. All planting pits shall be backfilled with a planting mix consisting of the following proportions by volume:

   1. One part native soil.
   2. One part peat.
   3. One part sand.

B. The planting mix shall be thoroughly mixed prior to final placement. If so directed by the Peachtree City Project Manager, ground limestone shall be added to the mix at a rate of 2-1/2 pounds per cubic yard for each full point rise in pH desired.

2.07 PLANTS

A. All plants removed, disturbed or damaged shall be replaced in kind, quantity and size.

B. Plants shall be nursery grown and have a habit of growth that is normal for the species. They shall be sound, healthy, vigorous and free from insect pests, plant diseases and injuries. All plants shall equal or exceed the measurements specified in the Plant List, which are minimum acceptable sizes. They shall be measured before pruning with branches in normal position. No pruning shall be done until the plants have been inspected by the Peachtree City Project Manager and in no case shall the plants supplied under this Contract be pruned back to such an extent that they no longer meet Specifications. Root bound container plants shall have their root balls scarified 1/2-inch deep along their length on two sides to cut the circling roots.

C. Substitutions of genus, species or variety will be permitted only upon submission of proof, in writing, that the specified plant or its alternative is not obtainable in the continental United States. Written authorization for substitution must be obtained from the Peachtree City Project Manager.

D. Under special conditions plants may be field collected if approved in writing by the Peachtree City Project Manager.

E. All plants (except ground-covers) in the Plant List shall be balled and burlapped or container grown unless noted otherwise. Balled and burlapped material shall be dug with firm, natural balls of earth of sufficient diameter and depth to encompass the fibrous and feeding root system necessary for full recovery of the plant. Balls shall be firmly wrapped with burlap and bound with twine, cord or wire mesh. Where necessary to prevent breaking or cracking of the ball during the process of planting, the ball may be secured to a platform.

2.08 MISCELLANEOUS MATERIALS

A. Water shall be suitable for irrigation and free from ingredients harmful to plant life. Hose and other watering equipment required for the work shall be furnished by the Contractor.

B. Mulch, if applicable, shall be pure grade pulverized pine bark or pine straw.

C. Fertilizer shall be slow release, resin-coated fertilizer having a chemical analysis of 19-6-12, equal to Osmocote.

D. Materials for Staking, Guying and Wrapping:

1. Stakes for supporting trees shall be 2-inches square x eight feet as shown on the Drawings. Stakes shall be rot resistant wood, e.g., redwood, oak, western cedar or pressure treated southern pine.

2. Wire for fastening trees to stakes or eye-bolts shall be No. 12 gauge pliable, galvanized steel.

3. Hose to encase guy wires or wires used for fastening shall be rubber garden hose.

4. Wrapping material for deciduous tree trunks shall be treated heavy crepe paper or burlap in strips 6 to 10-inches wide.

E. Turnbuckles shall have a 3-inch minimum lengthwise opening fitted with threaded ends and screw eyes. All parts shall be hot dipped galvanized steel or some other rust resistant material.

F. If required on Drawings, metal or plastic flags shall be minimum 3 x 5-inches x 1/8-inch thick attached by running wire through punched holes on both ends. Position at waist height on each wire.

PART 3 EXECUTION

3.01 TIME OF PLANTING

A. The Contractor shall be notified in writing by the Peachtree City Project Manager when other sections of the Work have progressed sufficiently to commence work of planting. Planting operations shall be conducted immediately under favorable weather conditions. These seasons shall be as follows:

1. Planting Season: Plant all trees, shrubs and ground covers between October 1 and April 1.

2. At the option and the full responsibility of the Contractor, planting operations may be conducted under unseasonable conditions without additional compensation.

3.02 PRODUCT HANDLING AND STORAGE

A. Balled and burlapped plants shall be dug and prepared for shipment in a manner that will not damage roots or branches.

B. Protection After Delivery: The balls or roots of plants not planted immediately on delivery shall be covered with moist soil or mulch, or other protection from drying winds and sun. All plants shall be watered as necessary, until planted. Balled plants shall be lifted by the truck of the plant.

3.03 PLANTING OF TREES, SHRUBS AND GROUND COVER

A. Except as otherwise specified, the Contractor's work shall conform to accepted horticultural practices as used in the trade.

B. The Peachtree City Project Manager shall verify the staking of all plants with labeled stakes to be furnished for this purpose by the Contractor.

C. Planting pits shall be dug and soil for planting ready before plants are delivered. Pits shall be excavated according to the dimensions indicated on the Drawings.

D. Ground cover beds, if applicable, shall be prepared by thorough loosening of existing sub-grade and by placement of a minimum of 4-inches of approved topsoil to conform to the final grade.

E. Excess excavated soil from planting operations shall be disposed of by the Contractor.

F. All plants shall be set on prepared soil to such depth that the finished grade level at the plant after settlement will be the same as that at which the plant has grown. They shall be planted upright and plumb. No burlap shall be pulled out from under balls. Platforms, wire and burlap for top and sides of the ball shall be removed. All broken or frayed roots shall be cut off cleanly. Topsoil or prepared soil shall be placed and compacted carefully to avoid injury to roots and to fill voids. When the hole is nearly filled, add water as necessary and allow it to soak away. Fill the hole to finish grade. After the ground settles, additional soil shall be filled to the level of the finished grade.

G. During the setting of plants, 20-10-5 slow release fertilizer tablets shall be positioned approximately halfway up the root system, evenly distributed around and adjacent to the root ball. The following shall apply:

1. Small Ground Cover Plants: One 5-gram tablet per plant.

2. Shrubs: Two 10-gram tablets for each one foot of height or spread.

3. Trees: Two 21-gram tablets for each 1/2-inch of truck diameter.

H. If applicable, staking and guying shall be performed. Supports shall be kept in place during entire warranty period.

I. Promptly after planting, trucks of all deciduous trees shall be wrapped spirally from the ground line to the height of the second branches. All wrapping shall be neat and snug and the material shall be held in place by brown unpolished jute twine.

J. Unless shown otherwise on the Drawings, all plants shall be mulched with a 3-inch layer of pine straw within two days after planting. This mulch shall entirely cover the area of the planting pit, bed or saucer around each plant.

K. If applicable, plant beds containing ericaceous plants shall be top dressed with ordinary powered sulfur at the rate of three pints per 100 square feet of area.

3.04 PRUNING AND REPAIR

Upon completion of the Work under the Contract, all new trees and shrubs shall have pruned and any injuries repaired. The amount of pruning shall be limited to the minimum necessary to remove dead or injured twigs and branches and to compensate for the loss of

roots as a result of transplanting operations. Pruning shall be done in such a manner as not to change the natural habit or shape of the plant. All cuts shall be made at the branch collar. Flush cutting of branches shall be grounds for rejecting the tree. The Contractor shall remove the tree from the site and substitute another of the same species and quality. Errors in pruning resulting in tree replacement shall not entitle the Contractor to additional compensation. On all bruises or scars on the bark and cuts over 3/4-inch in diameter, the injured cambium shall be traced back to living tissue and removed; wounds shall be smoothed and shaped so as not to retain water. Wound paint shall not be used.

3.05 INSPECTION FOR ACCEPTANCE

Upon completion of all planting and after written notification, inspection of the landscape work to determine partial completion of the contract work, exclusive of maintenance and replacement of plants, will be made by the Peachtree City Project Manager. Inspection of the work will be made again by the Peachtree City Project Manager at the end of the maintenance period.

3.06 MAINTENANCE

Maintenance shall begin immediately after each plant is planted and shall continue until all plants are accepted. Planting shall be protected and maintained by watering, fertilizing and replanting as necessary for at least one full year after job completion.

END OF SECTION

SECTION 33 05 13

MANHOLES AND STRUCTURES

PART 1 GENERAL

1.01 DESCRIPTION

A. The work required under this section consists of all materials, accessories, equipment, tools, and labor required to construct and/or place precast concrete manholes, where shown on the drawings.

B. Manholes shall be constructed of specified materials to the sizes, shapes and dimensions, and at the locations shown on the plans or as otherwise directed by the Peachtree City Project Manager. Generally, the height of manholes shall be such that the top of the manhole frame will be at the finished grade of the pavement or ground surface for manholes located in pavement, in road or street rights-of-ways or in maintained grounds. In areas other than above, the top of the manhole shall be 24 to 30 inches above the finish ground level.

1.02 REFERENCES

A. ASTM A 48 - Standard Specification for Gray Iron Castings.

B. ASTM C 55 - Standard Specification for Concrete Brick.

C. ASTM C 62 - Standard Specification for Building Brick (Solid Masonry Units Made From Clay or Shale).

D. ASTM C 144 - Standard Specification for Aggregate for Masonry.

E. ASTM C 270 – Standard Specification for Mortar for Unit Masonry.

F. ASTM C 478 - Standard Specification for Precast Reinforced Concrete Manhole Sections.

G. ASTM C 923 - Standard Specification for Resilient Connectors Between Reinforced Concrete Manhole Structures, Pipes and Laterals.

H. IMIAWC (CW) - Recommended Practices & Guide Specifications for Cold Weather Masonry Construction; International Masonry Industry All-Weather Council.

I. ASTM C 1244 - Concrete Sewer Manholes by the Negative Air Pressure (Vacuum) Test.

1.03 SUBMITTALS

A. See Section 01 33 00 for submittal procedures.

B. Shop Drawings: Indicate manhole locations, elevations, piping sizes and elevations of penetrations.

C. Product Data: Provide manhole covers, component construction, features, configuration, and dimensions.

1.04 QUALITY ASSURANCE

Manufacturer: Company specializing in manufacturing products specified in this section with minimum three years documented experience.

1.05 ENVIRONMENTAL REQUIREMENTS

A. Maintain materials and surrounding air temperature to minimum 50 degrees F (10 degrees C) prior to, during, and 48 hours after completion of masonry work.

B. Cold Weather Requirements: Comply with recommendations of IMIAWC (CW).

PART 2 PRODUCTS

2.01 MATERIALS

A. Manhole Sections: Reinforced precast concrete in accordance with ASTM C 478, with resilient connectors complying with ASTM C 923.

B. Manhole Sections and Joints: Water tight joints for precast manhole sections, using rubber gaskets for sealing the joints shall be in accordance with ASTM C 443.

C. Manhole Boots: Shall be NPC Kor-N-Seal connectors or approved equal.

D. Integral Steps: Fiber reinforced plastic in accordance with ASTM D 3753.

E. Concrete: As specified in Section 03 33 00.

F. Concrete Reinforcement: As specified in Section 03 33 00.

G. Brick: Shall conform to applicable requirements of ASTM C62 Grade NW.

H. Mortar: Shall be a 3:1 sand-cement mix.

2.02 COMPONENTS

A. Ring and Cover: ASTM A 48, Class 30B Cast iron construction, machined flat bearing surface, removable lockable cover (Bolted Watertight Cover) or removable non-lockable cover (non-bolted), closed cover design; sealing gasket; cover molded with identifying name provided by the owner. Use USF 367 for (Bolted Watertight Standard) Cover or approved equal. Or use U.S. Foundry (USF) 360-E Ring and Cover Series or approved equal for (non-bolted) covers.

See plans for frame and cover requirements.

B. Manhole Steps: Polypropylene safety steps meet to ASTM A-615 and ASTM C-478, AASHTO M-199 and all OSHA specifications. The 1/2" grade 60 steel reinforcing bar meets ASTM A-615. Polypropylene rungs shall be 1 inch diameter or approved equal.

C. Manhole Boots: Rubber boots shall be designed and manufactured to meet or exceed the requirements of ASTM C-923 "Standard Specification for Resilient Connectors Between Reinforced Concrete Manhole Structures, Pipes and Laterals". The rubber seal shall be made from a resilient rubber compound, which conforms to ASTM C923. The pipe clamp shall be manufactured from 304 series non-magnetic stainless steel, which conforms to ASTM C923 and ASTM A167.

2.03 CONFIGURATION

A. Construction: Cylindrical base, vertical sections with eccentric cone top section with tongue and groove joints.

B. Shape: Cylindrical unless otherwise noted on the plans.

C. Clear Inside Dimensions: 48 inch diameter or as indicated on the plans.

D. Design Depth: As indicated on the plans.

E. Clear Cover Opening: Shall be 20-5/8” to 22-1/2”.

F. Pipe Entry: Provide openings as indicated on the plans.

G. Steps: Set every 15 inches as indicated on the plans.

PART 3 EXECUTION

3.01 EXAMINATION

A. Verify items provided by other sections of work are properly sized and located.

B. Verify that built-in items are in proper location, and ready for roughing into work.

C. Verify excavation for manholes is correct.

3.02 MANHOLES

A. All manhole sections shall be manufactured in accordance to ASTM C-478.

B. Place manhole sections plumb and level, trim to correct elevations.

C. Form and place manhole cylinder plumb and level, to correct dimensions and elevations.

D. All manholes base sections shall have preformed inverts cast per the plans or have a cast-in-place invert cast following installation of pipes within the structure.

E. The manhole base shall be set on a 8 inch (minimum thickness) mat of No. 57 stone or as shown on the construction drawings.

F. Set frames and covers to correct elevations and properly anchor to the masonry. Where manholes are constructed in paved areas, the top surface of the frame and cover shall be tilted to conform to the exact slope, crown and grade of the existing or proposed pavement.

G. Installation for the step can be cast in place or driven into pre-formed or drilled hole. The step will resist pullout forces of over 1500 lbs.

3.03 MASONRY WORK

A. Maintain masonry courses to uniform dimension. Form vertical and horizontal joints of uniform thickness.

B. Lay masonry units in running bond. Course one unit and one mortar joint to equal 8 inches.

C. Form concave mortar joints.

D. Lay masonry units in full bed of mortar, with full head joints, uniformly jointed with other work.

E. Install joint reinforcement 16 inches on center.

F. Place joint reinforcement in first and second horizontal joints above base pad and below cover frame opening.

END OF SECTION

SECTION 33 40 00

STORM DRAINAGE PIPING

PART 1 GENERAL

1.01 SCOPE

Furnish all labor, equipment, supplies, and materials and perform all operations in connection with construction of storm sewers as shown on the plans or specified. Construction shall be in accordance with the Georgia Department of Transportation Standard Specifications, Construction of Roads and Bridges, Latest Edition.

1.02 RELATED SECTIONS

A. Section 31 23 16 – Trench Excavation, and Backfill.

B. Section 33 05 13 - Manholes and Structures.

C. Section 03 31 00 - Cast-In-Place Concrete.

D. Section 03 41 00 - Precast Concrete Structures.

1.03 REFERENCES

A. AASHTO M 36/ASTM A 760 - Standard Specification for Corrugated Steel Pipe, Metallic-Coated, for Sewers and Drains; American Association of State Highway and Transportation Officials and Georgia Department of Transportation Standard Specifications, Section 844 latest Edition.

B. AASHTO M 170 - Standard Specification for Reinforced Concrete Pipe and Georgia Department of Transportation Standard Specifications, Section 843 latest Edition.

C. AASHTO M 190/ASTM A 849 - Standard Specification for Bituminous Coated Corrugated Steel Culvert Pipe and Georgia Department of Transportation Standard Specifications, Section 844 latest Edition.

D. AASHTO M 294 - Corrugated Polyethylene Pipe (12" through 48") and Georgia Department of Transportation Standard Specifications, Section 845 latest Edition.

E. ASTM C 14 - Standard Specification for Concrete Sewer, Storm Drain, and Culvert Pipe.

F. ASTM C 76 - Standard Specification for Reinforced Concrete Culvert, Storm Drain, and Sewer Pipe.

G. ASTM C 443 - Standard Specification for Joints for Circular Concrete Sewer and Culvert Pipe, Using Rubber Gasket.

H. ASTM F405 – Standard Specification for Corrugated Polyethylene Pipe and Fittings.

I. ASTM F667 – Standard Specification for large diameter Corrugated Polyethylene Pipe and Fittings.

J. ASTM 949 – Standard Specificaion for Poly(Vinyl Chloride) (PVC) Corrugated Sewer Pipe With a Smooth Interior and Fittings.

1.04 SUBMITTALS

Complete product data and engineering data, including shop drawings, shall be submitted to the Peachtree City Project Manager in accordance with the requirements of Section 01 33 00 of the Contract Documents.

1.05 TRANSPORTATION AND HANDLING

A. Unloading: Furnish equipment and facilities for unloading, handling, distributing and storing pipe, fittings and accessories. Make equipment available at all times for use in unloading. Do not drop or dump materials. Any materials dropped or dumped will be subject to rejection without additional justification. Pipe handled on skids shall not be rolled or skidded against the pipe on the ground.

B. Handling: Handle pipe, fittings and accessories carefully to prevent shock or damage. Handle pipe by rolling on skids, forklift, or front end loader. Do not use material damaged in handling. Slings, hooks or pipe tongs shall be padded and used in such a manner as to prevent damage to the exterior coatings or internal lining of the pipe. Do not use chains in handling pipe, fittings and appurtenances.

1.06 STORAGE AND PROTECTION

A. Store all pipe which cannot be distributed along the route. Make arrangements for the use of suitable storage areas.

B. Stored materials shall be kept safe from damage.

C. Pipe shall not be stacked higher than the limits recommended by the manufacturer. The bottom tier shall be kept off the ground on timbers, rails or concrete. Pipe in tiers shall be alternated: bell, plain end; bell, plain end. At least two rows of timbers shall be placed between tiers and chocks, affixed to each other in order to prevent movement. The timbers shall be large enough to prevent contact between the pipe in adjacent tiers.

PART 2 PRODUCTS

2.01 PIPE MATERIALS

A. Reinforced Concrete Pipe (RCP): Shall conform to the requirements of AASHTO M 170, ASTM C 76, ASTM C 361; mesh reinforcement; bell and spigot end joints.

B. Corrugated Aluminum Alloy Pipe (CAAP): Aluminum Alloy Pipe shall conform to the requirements of AASHTO M 196 / ASTM B 745. All pipe shall be 14 gauge unless otherwise noted on the plans.

C. High Density Polyethylene Pipe (HDPE): Smooth interior, corrugated exterior HDPE storm sewer pipe meeting the requirements of AASHTO M 252, M 294 and MP7. The pipe shall be AASHTO Type 'S' (N-12) WT as manufactured by Advanced Drainage Systems, Inc. (ADS) for sizes 4” through 60” or approved equal.

D. Poly(Vinyl Chloride) (PVC): Smooth interior, corrugated exterior PVC storm sewer pipe shall conform to the requirements of ASTM F949, F794 and AASHTO M304. The pipe shall be A-2000 PVC belled as manufactured by CONTECH Construction Products Inc. for sizes 4” through 36” or approved equal.

E. All storm drainage pipe shall meet or exceed the Georgia Department of Transportation Standard Specification, Section 550 unless otherwise noted on the plans or within this specification.

2.02 PIPE ACCESSORIES

A. Pipe Joints: Mechanical clamp ring type, stainless steel expanding and contracting sleeve, neoprene ribbed gasket for positive seal and Reinforced Concrete Pipe Joint Device: Shall conform to the requirements of AASHTO M 198 / ASTM C 361, ASTM C 443. “O”-ring type rubber gasketed concrete joints.

B. Fittings: Same material as pipe molded or formed to suit pipe size and end design, in required tee, bends, elbows, cleanouts, reducers, traps and other configurations required.

All fittings shall conform to manufacturers specifications.

C. Filter Fabric: Non-biodegradable, woven.

D. Coupling Bands: Aluminized steel, 0.052 inches thick x 10 inches wide; connected with two neoprene "O" ring gaskets and two galvanized steel bolts and shall conform to the requirements of AASHTO M 36.

2.03 CATCH BASINS, RAISED LID INLETS, DROP INLETS, & HOODED GRATE INLETS

A. Construction shall be in accordance with the Georgia Department of Transportation Standard Specifications, Section 668 latest Edition.

B. Lids and Drain Covers: Shall be cast iron.

C. Layout: as shown on drawings or, per Georgia Department of Transportation Standards and Details.

D. Shaft Construction and Concentric Cone Top Section: Reinforced precast concrete pipe sections ASTM C478, lipped male/female dry joints, nominal diameter of 48 inches.

E. Base Pad: Cast-in-place concrete of type specified in Section 03 33 00 or 32 13 13, leveled top surface to receive concrete shaft sections, sleeved to receive sewer pipe sections.

F. See Section 33 05 13 Manholes and Covers for additional information on manhole steps, brick, mortar etc.

2.04 HEADWALLS AND END SECTIONS

Construction shall be in accordance with the Georgia Department of Transportation Standards and Details.

2.05 BEDDING AND COVER MATERIALS

Bedding and Cover: As specified in Section 31 23 16 - Trench Excavation and Backfill.

PART 3 EXECUTION

3.01 EXISTING UNDERGROUND UTILITIES AND OBSTRUCTIONS

A. The plans indicate utilities and obstructions that are known to exist according to the best information available to the Owner.

B. Existing Utility Location: The following steps shall be exercised to avoid interruption of existing utility service.

1. Expose the facility, for a distance of at least 100 feet in advance of pipeline construction, to verify its true location and grade. Repair, or have repaired, any damage to utilities resulting from locating or exposing their true location.

2. Avoid utility damage and interruption by protection with means or methods recommended by the utility owner.

C. Conflict with Existing Utilities

1. Horizontal Conflict: Horizontal conflict shall be defined as when the actual horizontal separation between a utility, main, or service and the proposed piping does not permit safe installation of the piping by the use of sheeting, shoring, tying-back, supporting, or temporarily suspending service of the parallel or crossing facility. The Contractor may change the proposed alignment of the piping to avoid horizontal conflicts if the new alignment complies with regulatory agency requirements and after a written request to and subsequent approval by the Peachtree City Project Manager. Where such relocation of the piping is denied by the Peachtree City Project Manager, the Contractor shall arrange to have the utility, main, or service relocated.

2. Vertical Conflict: Vertical conflict shall be defined as when the actual vertical separation between a utility, main, or service and the proposed piping does not permit the crossing without immediate or potential future damage to the utility, main, service, or the piping. The Contractor may change the proposed grade of the piping to avoid vertical conflicts if the changed grade maintains adequate cover and complies with regulatory agencies requirements after written request to and subsequent approval by the Peachtree City Project Manager.

D. Electronic Locator: Have available at all times an electronic pipe locator and a magnetic locator, in good working order, to aid in locating existing pipe lines or other obstructions.

E. Water and Storm Sewer Separation

1. Potable water mains should maintain a minimum 10 foot edge-to-edge separation from storm sewer lines.

2. Where storm sewers cross the water main, the pipe joint adjacent to the pipe crossing the water main shall be cut to provide maximum separation of the pipe joints from the storm sewer.

3. No water main shall pass through, or come in contact with, any part of a storm sewer manhole.

3.02 TRENCHING

See Section 31 23 16 - Trench Excavation and Backfill for minimum requirements.

3.03 INSTALLATION - PIPE

A. Verify that trench cut is ready to receive work and excavations, dimensions, and elevations are as indicated on construction plans.

B. Install pipe, fittings, and accessories in accordance with manufacturer's instructions. Seal watertight.

C. Lay pipe to slope gradients noted on construction plans; with maximum variation from true slope of 1/8 inch in 10 feet.

D. Reinforced Concrete Pipe shall be installed in accordance with applicable provisions of the American Concrete Pipe Association (ACPA). RCP shall be installed on a Class C bedding as specified in Section 31 23 16.

E. Corrugated Aluminum Alloy Pipe (CAAP) shall be installed on a Class B bedding as specified in Section 31 23 16.

F. High Density Polyethylene Pipe (HDPE) shall be installed on a Class B bedding as specified in Section 31 23 16.

G. Poly(Vinyl Chloride) (PVC) PIPE shall be installed on a Class B bedding as specified in Section 31 23 16.

3.04 INSTALLATION - CATCH BASINS AND MANHOLES

A. Form bottom of excavation clean and smooth to correct elevation.

B. Form and place cast-in-place concrete base pad, with provision for storm sewer pipe end sections.

C. All structures shall be placed on an 8-inch subbase of No. 57 stone.

D. Level top surface of base pad; sleeve concrete shaft sections to receive storm sewer pipe sections.

E. Establish elevations and pipe inverts for inlets and outlets as indicated.

F. Mount lid and frame level in grout, secured to top cone section to elevation indicated.

3.05 FIELD QUALITY CONTROL

A. Perform field inspection and testing as directed by the Peachtree City Project Manager.

B. If tests indicate Work does not meet specified requirements, remove Work, replace and retest at no cost to owner.

3.06 PROTECTION

Protect pipe and bedding cover from damage or displacement until backfilling operation is in progress.

END OF SECTION

SECTION 34 40 00

TRAFFIC CONTROL

PART 1 GENERAL

1.01 SCOPE OF WORK

A. Contractor shall furnish all materials and labor for the installation and continuous maintenance of traffic control devices throughout the project.

B. This item of work shall include furnishing, installing, maintaining, relocating and removing all traffic control devices used for the purpose of regulating, warning or directing traffic during the construction or maintenance of this project.

C. Upon completion of work, warning devices are to be removed by the Contractor.

1.02 SAFETY

A. The governing factor in the execution and staging of work for this project is to provide the public with the safest possible travel conditions along the roadway through the construction zone. The Contractor shall arrange his operation to keep the closing of any lane of a roadway to an absolute minimum.

B. No work shall be started on any phase of the project until all appropriate traffic control devices are in place and in operation.

C. Contractor is to take all practical precautions to maintain traffic flow, and provide safety of workers and the general public.

D. At the end of each workday, contractor is to clear the roadway of all dirt and debris and add additional safety devices to maintain safe travel lanes.

E. When not in use, all traffic control devices shall be removed, placed or covered so as not to be visible to traffic.

1.03 REFERENCES

A. Manual for Uniform Traffic Control Devices (MUTCD) (latest edition).

B. Georgia Department of Transportation (Ga. DOT) Standard Specifications for Construction of Roads and Bridges (latest edition), Section 150.

C. Georgia Department of Transportation (Ga. DOT) Standard Construction Details (latest edition).

PART 2 PRODUCTS

2.01 TRAFFIC CONTROL DEVICES

A. Traffic Control Devices include: signs and their supports, signals, pavement markings, barricades with sand bags, channelizing devices, warning lights, arrowboards, flaggers, or any other device used for the purpose of regulating, warning or guiding traffic through the construction zone.

B. All Traffic Control Devices used on this project shall conform to the plans, Ga. DOT Construction Details and Specifications, and MUTCD.

C. Traffic Control Devices shall be in proper, acceptable condition when in use. Devices which are unclear, damaged, or not correctly positioned shall be promptly restored to fully operational condition.

PART 3 EXECUTION

3.01 PLAN AND PERMITS

A. Unless otherwise noted, Contractor is responsible for preparing his/her own traffic control plan and instituting the plan in compliance with all applicable Georgia DOT requirements.

B. The Contractor shall be responsible for the proper location, installation, and arrangement of all traffic control devices. Special attention shall be given to advance warning signs during construction operations in order to keep lane assignment consistent with barricade placement at all times. The Contractor shall cover all Traffic Control Devices which are inconsistent with detour or lane assignment patterns during the transition from one construction stage to another.

C. Construction signs referring to daytime lane closures during working hours shall be removed or covered during non-working hours.

D. The Contractor shall ensure all Traffic Control Devices installed by him are operational 24 hours a day, including weekends and holidays. Provide additional inspections at regular intervals.

E. When traveling in lanes open to public traffic, the contractor's vehicles shall always move with and not against or across the flow of traffic. These vehicles shall enter or leave work areas in a manner which will not be hazardous to, or interfere with, traffic and shall not park or stop except within designated work areas. Personal vehicles shall not park within the right of way except in specific areas designated on the plans. If an area is not designated on the plans, then the Contractor shall propose an area for parking and secure approval from the Peachtree City Project Manager.

F. Private driveways and parking areas shall be accessible at all times unless temporary closings are necessary for construction work. The Contractor shall

notify the Peachtree City Project Manager and the affected individuals at least 24 hours in advance of the closure. Reasonable accommodations to the affected individuals shall be made by the Contractor to limit impacts on their property and operations.

G. If trenches are to remain open overnight, or for an extended period of time, Contractor is to provide heavy duty cover plates to allow vehicles access.

H. If Flaggers are required, they are to be adequately trained, qualified and certified by the Georgia DOT.

END OF SECTION

CITY OF PEACHTREE CITY

LOCAL DESIGN MANUAL | 2016 EDITION

Appendix D – Construction Details

October 2016

PEACHTREE CITY

STATE	PROJECT NUMBER	SHEET NO.	TOTAL SHEETS
GA.			

CATCH BASIN (IF CATCH BASIN HAS LONGITUDINAL PIPE OVER 24", SEE DETAILS AT RIGHT.)

NOTE: OPENING FOR PIPE SHALL BE THE OUTSIDE DIAMETER OF THE REQUIRED PIPE PLUS 3" MIN. OPENING SHALL HAVE CORRUGATIONS.

NOTE: FOR ALL CATCH BASINS:
½" EXPANSION JOINT MATERIAL SHALL BE PLACED AROUND THE CATCH BASIN WHERE SIDEWALK OR MEDIAN PAVEMENT IS PLACED ADJACENT TO THE CATCH BASIN.

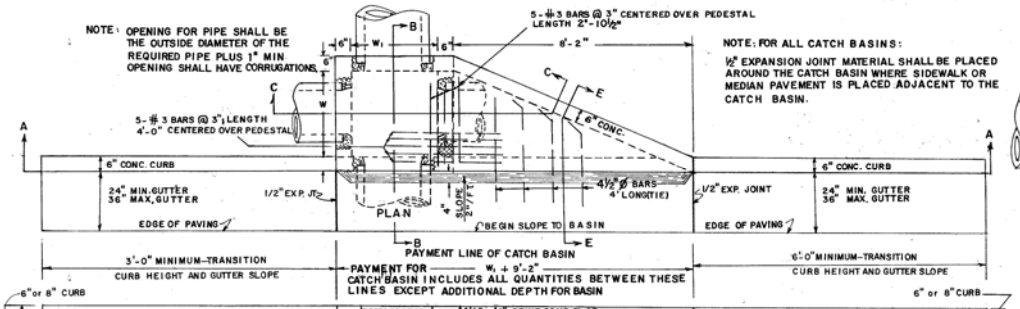

CATCH BASIN (TYPICAL FOR CATCH BASIN WITH LONGITUDINAL PIPE OVER 24")

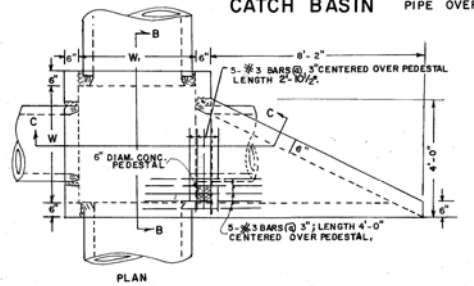

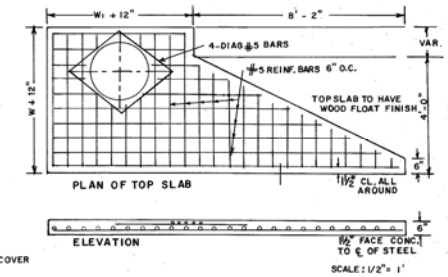

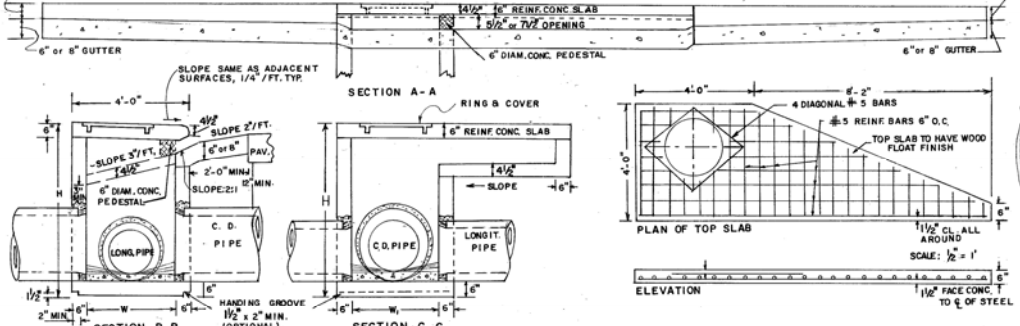

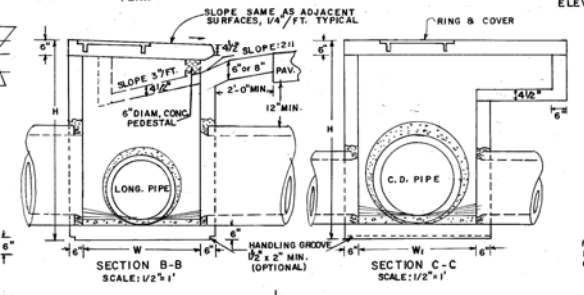

REINFORCING - ISOMETRIC VIEW

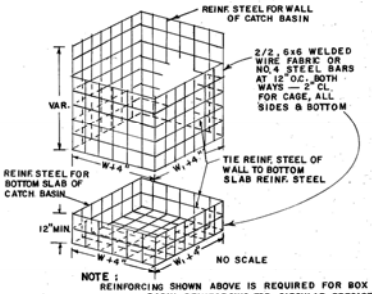

NOTE: REINFORCING SHOWN ABOVE IS REQUIRED FOR BOX SHAPED BASIN. REINFORCING FOR CIRCULAR PRECAST ALTERNATE SHALL BE ACCORDING TO STD. 1040.

ALL JOINTS BETWEEN PRECAST RISERS OR BETWEEN PRECAST BASE AND RISER WILL BE KEYED, KEYED JOINTS SHOWN ARE TYPICAL AND MAY BE VARIED.

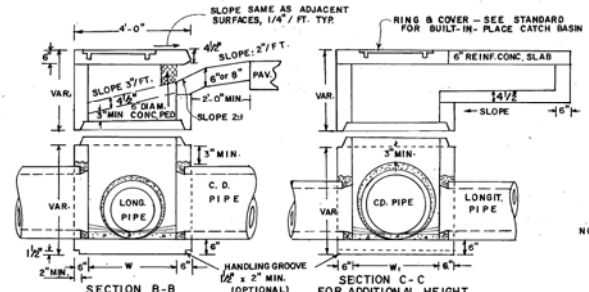

DETAIL AND ARRANGEMENT OF LADDER BARS

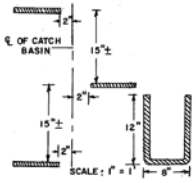

NOTE:
NUMBER AND LOCATION OF LADDER BARS IN CATCH BASIN TO BE AS DIRECTED BY THE ENGINEER.
M.H. STEPS LISTED IN GA. D.O.T. LABORATORY'S QUALIFIED PRODUCTS LIST MAY BE SUBSTITUTED.

METHOD OF CONNECTING PIPE (WHERE CONCRETE PIPE HAS TO BE CUT)

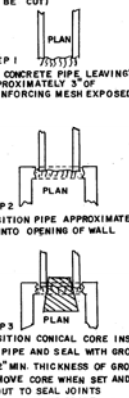

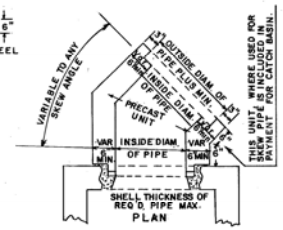

A METHOD OF CONNECTING SKEWED PIPE

IF THIS SWIVEL SECTION SLAB IS USED TO REDUCE THE W AND W₁ DIMENSIONS, INCREASE THE MIN. THICKNESS TO 9" AND USE REINF. STEEL. SEE DETAIL BELOW.

TYPICAL ISOMETRIC VIEW

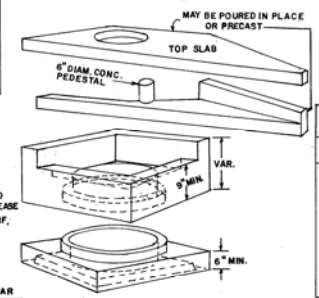

DETAIL FOR REINFORCED STEEL

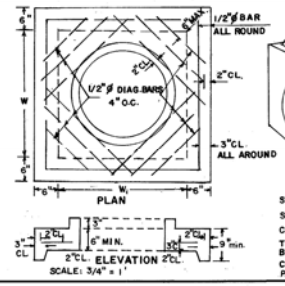

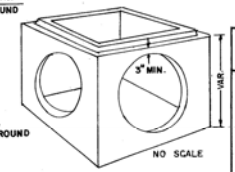

SWIVEL SECTION MAY BE USED WHERE SKEWED PIPE CONNECTS TO PRECAST CONCRETE BOX.
THE ABOVE VIEW DEPICTS PRECAST BOX. SEE SEPARATE STANDARDS FOR CIRCULAR ALTERNATE OR BUILT-IN-PLACE BOX.

DIMENSIONS FOR CATCH BASINS

PIPE SIZE	NORMAL W OR W₁	MIN H
12"	3'-0"	4'-4"
15"	3'-0"	4'-7"
18"	3'-0"	4'-10"
24"	3'-0"	5'-6"
30"	3'-6"	6'-2"
36"	4'-0"	6'-10"
42"	5'-0"	7'-4"
48"	5'-0"	8'-0"
54"	6'-0"	8'-6"
60"	6'-0"	9'-2"

NOTE:
DIMENSIONS FOR CATCH BASINS ARE BASED UPON TYPICAL OUTSIDE DIAMETERS OF CONCRETE PIPES AND MAY BE VARIED IF CONDITIONS PERMIT AND THE ENGINEER APPROVES. W & W₁ DIMENSIONS DO NOT HAVE TO BE EQUAL.

ALTERNATE:
BUILT-IN-PLACE, PRECAST BOX, AND/OR PRECAST CIRCULAR UNITS WITH THE REQUIRED ADAPTERS, REDUCERS, FITTINGS, CONNECTIONS, ETC. MAY BE USED IN COMBINATIONS.

NOTE:
FOR RING & COVER DETAILS AND OTHER DETAILS NOT SHOWN, SEE STANDARD 1033D FOR BUILT-IN-PLACE CATCH BASIN.

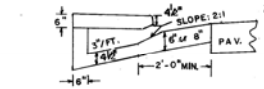

DETAIL OF TOP SLAB, REINF. STEEL & CLEARANCES REQUIRED

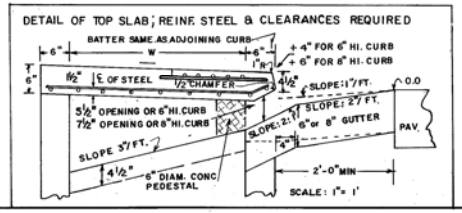

DEPARTMENT OF TRANSPORTATION
STATE OF GEORGIA

STANDARD PRECAST CATCH BASINS
FOR USE WITH CURB (6" OR 8" HT.) & GUTTER

SCALE AS SHOWN — REV. & REDR., SEPT., 1982

REV. & REDR. RMU — TRA GME — CHK RKC

(SUBMITTED) Floyd E. Hardin — STATE ROAD & AIRPORT DESIGN ENGR.
(APPROVED) [signature] — STATE HIGHWAY ENGINEER

NUMBER 1033D PRECAST

FORM EF3

AF 21868

STATE	PROJECT NUMBER	SHEET NO.	TOTAL SHEETS
GA.			

CATCH BASIN

(FOR CATCH BASIN WITH LONGIT. PIPE OVER 24", SEE DETAILS AT RIGHT.)

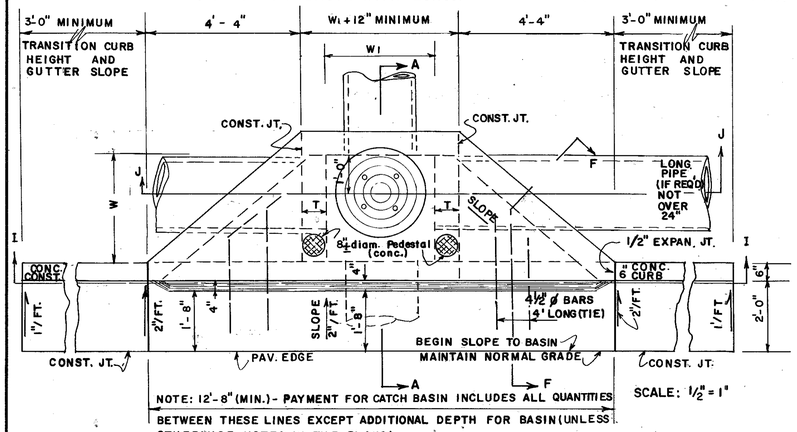

NOTE: 12'-8" (MIN.) - PAYMENT FOR CATCH BASIN INCLUDES ALL QUANTITIES BETWEEN THESE LINES EXCEPT ADDITIONAL DEPTH FOR BASIN (UNLESS OTHERWISE NOTED IN THE PLANS)

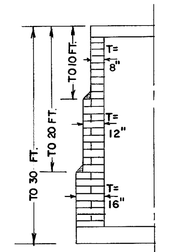

DEPTH LIMITS FOR INCREASING "T"

DETAIL OF TOP STAB REINF. STEEL & CLEARANCES REQ'D.

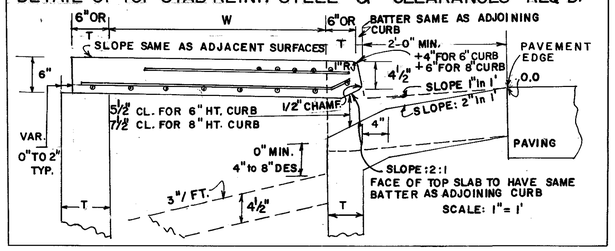

CASTING DETAILS

3° TO 7° DRAFTS TYP.

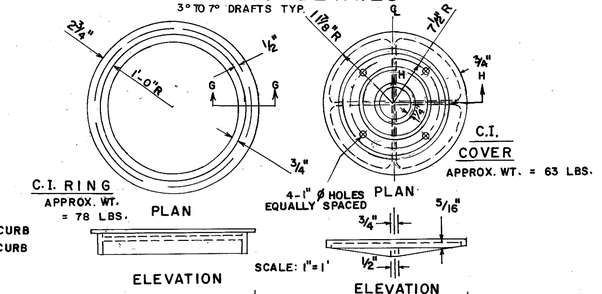

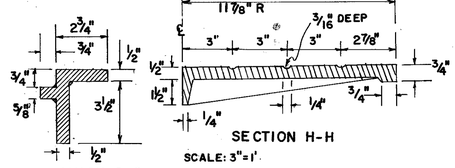

CATCH BASIN (WITH PROTUDED BACK)

FOR USE WITH LONGITUDINAL PIPE OVER 24" OR FOR USE WITH RECESSED BOX

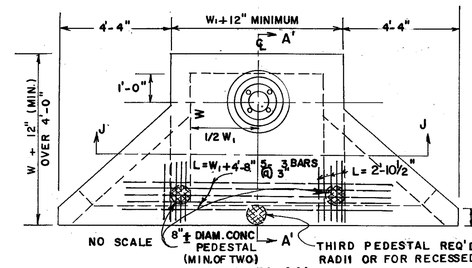

NOTE: DETAILS NOT SHOWN HERE WILL BE SIMILAR TO THOSE AT FAR LEFT FOR NORMAL CATCH BASINS.

PART PLAN

NOTE: RECESSED BOX TO BE USED ONLY WHERE SPECIFIED, H2 & W2 TO BE SHOWN IN PLANS

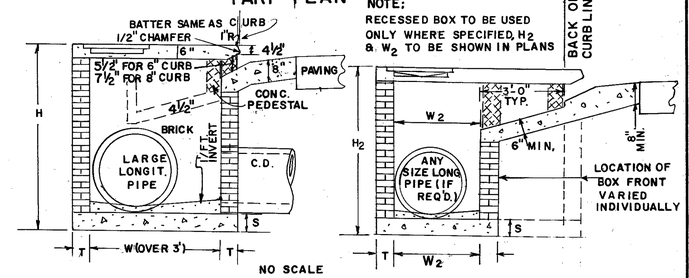

SECTION A'-A' (FOR LONGIT. PIPE OVER 24")

SECTION A'-A' (FOR RECESSED BOX)

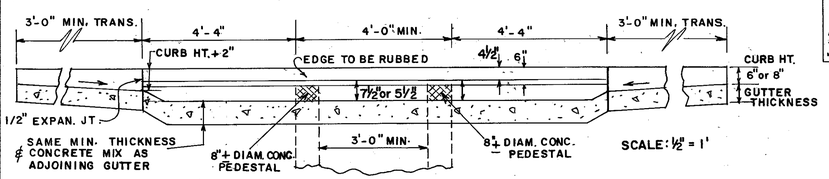

SECTION I-I

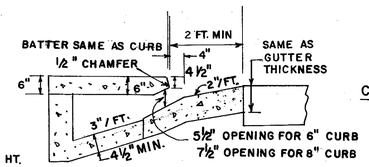

SECTION F-F

NOTE: NORMAL SLOPE OF CONCRETE APRON TO BE INCREASED UP TO 8" TOTAL WHERE "H" PERMITS AND LONGITUDINAL PIPE IS LOWERED FOR OTHER REASONS.

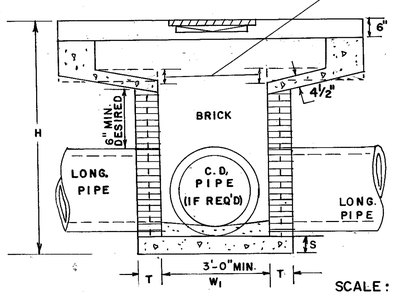

SECTION J-J

SCALE: 1/2" = 1'

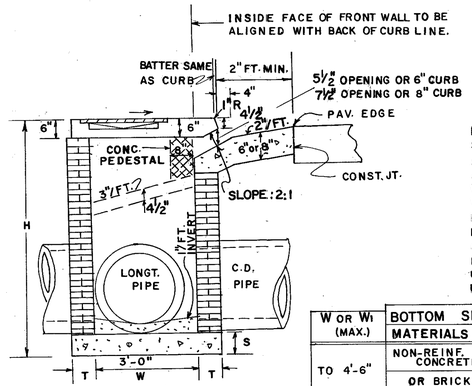

SECTION A-A

NOTE: SEE SEPARATE STDS. FOR PRECAST ALTERNATES. ADAPTERS (STD. 1040) WILL BE REQUIRED WITH CIRCULAR PRECAST UNITS. PRECAST BOX, CIRCULAR, AND/OR BUILT-IN-PLACE CONSTR. MAY BE USED IN COMBINATIONS

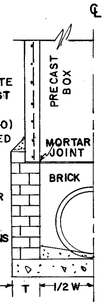

PRECAST BOX ON BRICK (HALF-SECTION)

W OR W1 (MAX.)	BOTTOM SLAB MATERIALS	"S"
TO 4'-6"	NON-REINF. CONCRETE	6"
	OR BRICK	8"
OVER 4'-6"	CONC. REINF. W1 4 BARS 12" O.C. BOTH WAYS 2" CL. FROM SLAB TOP	8"

CATCH BASIN ON RADII

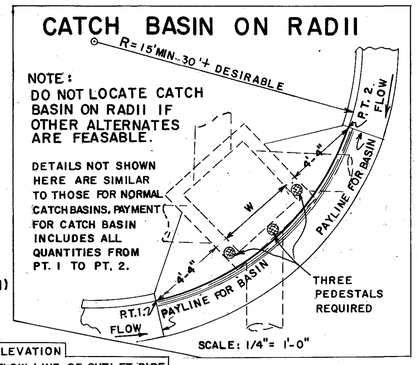

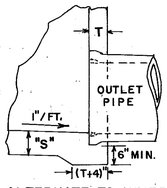

ALTERNATE TO INVERT

DETAIL OF TOP REINFORCED CONCRETE SLAB

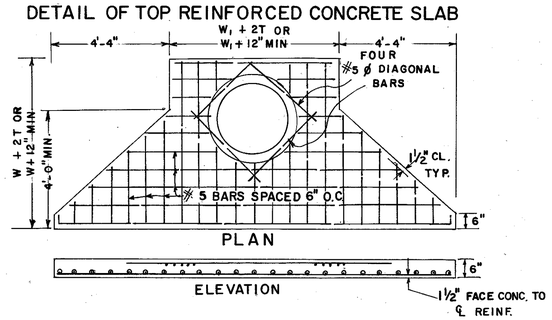

NOTE: TYPICAL TREATMENT FOR SKEWED PIPES ARE: CIRCULAR PRECAST UNITS; PRECAST SWIVEL SECTIONS; PIPE ELBOWS OR INCREASED BOX SIZES TO ACCOMODATE THE SKEWS.

SEE SEPARATE STANDARDS FOR PRECAST ALTERNATES.

DETAIL OF TOP REINFORCED CONCRETE SLAB

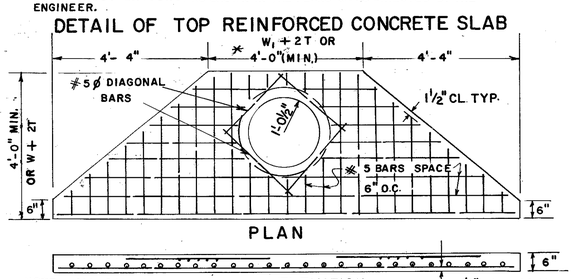

NOTE: ALL BARS IN PLAN VIEW ARE SPACED AT 6" O.C.

NOTE: FOR PLAN DETAIL OF REINFORCING STEEL IN TOP PORTION OF SLAB. SEE PART PLAN AT TOP RIGHT.

NOTE: TOP SLAB MAY BE CAST IN PLACE OR PRECAST. IF CAST IN PLACE, BUILDER'S PAPER IS TO BE PLACED BETWEEN THE CATCH BASIN AND TOP SLAB.

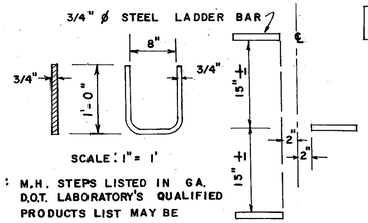

NOTE: M.H. STEPS LISTED IN GA. D.O.T. LABORATORY'S QUALIFIED PRODUCTS LIST MAY BE SUBSTITUTED.

ALL CATCH BASINS WILL HAVE STEPS OR LADDER BARS. NUMBER & LOCATION TO BE AS DIRECTED BY THE ENGINEER.

DETAIL OF LADDER BARS

▲E = MINIMUM DIFFERENCE IN ELEVATION FROM PAVEMENT EDGE TO FLOW LINE OF OUTLET PIPE.

TYPICAL MIN. DIMENSIONS			
PIPE DIA.	H (MIN.)	W or W1	MIN. ▲E
12	4'-4"	3'-0"	3'-3"
15	4'-7"	3'-0"	3'-6"
18	4'-10"	3'-0"	3'-9"
24	5'-6"	3'-0"	4'-4"
30	6'-2"	3'-7"	5'-0"
36	6'-10"	4'-6"	5'-7"
42	7'-4"	5'-3"	5'-11"
48	8'-0"	6'-0"	6'-6"
54	8'-6"	6'-8"	7'-0"
60	9'-2"	7'-4"	7'-7"

NOTE: THE MIN. H & MIN. ▲E GIVEN IN ABOVE TABLE ARE BASED UPON TYPICAL OUTSIDE DIAMETERS OF CONC. PIPE AND MAY BE VARIED, IF CONDITIONS PERMIT WITH VARIED DIMENSIONS SPECIFIED IN THE PLANS OR DIRECTED BY THE ENGINEER. W & W. DIMENSIONS DO NOT HAVE TO BE EQUAL.

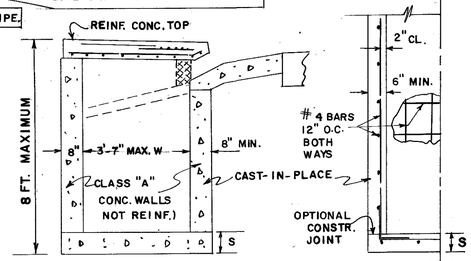

NON REINFORCED SMALL BASIN (W1 NOT OVER 3'-7")

REINFORCED CONC. HALF-SECTION.

NOTE: DETAILS NOT SHOWN ABOVE FOR CONSTRUCTION ALTERNATES WILL BE SIMILAR TO BRICK CATCH BASIN DETAILS.

CONSTRUCTION ALTERNATES

DEPARTMENT OF TRANSPORTATION
STATE OF GEORGIA

STANDARD CATCH BASINS

FOR USE WITH CURB (6" OR 8" HT.) & GUTTER (IN SAGS OR LOW POINTS)

SCALE AS SHOWN — REV. & RED. AUGUST, 1982

REV. & REDR. R.M.U. — TRA G.M.E. — CHK. R.K.C.

(SUBMITTED) Floyd E. Hardy — STATE ROAD & AIRPORT DESIGN ENGR.

(APPROVED) Thomas D. Wilcox — STATE HIGHWAY ENGINEER

NUMBER 1034D

FORM EF3

STATE	PROJECT NUMBER	SHEET NO.	TOTAL SHEETS
GA.			

NOTE:
SEE STANDARD 1019-A- BRICK DROP INLETS- FOR DETAIL OF GRATING FRAME,HOOD,ETC., WHERE NEEDED.

TYPE "A"

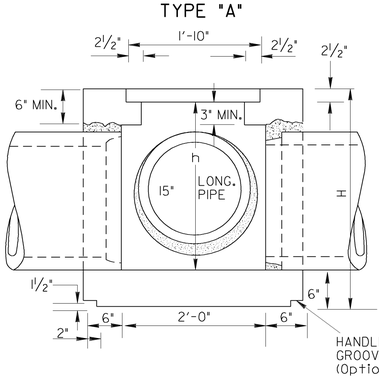

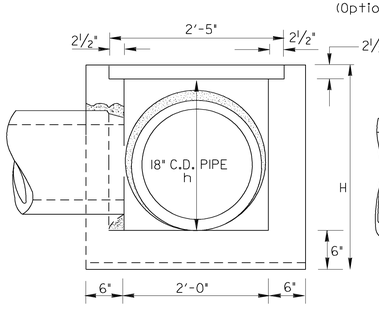

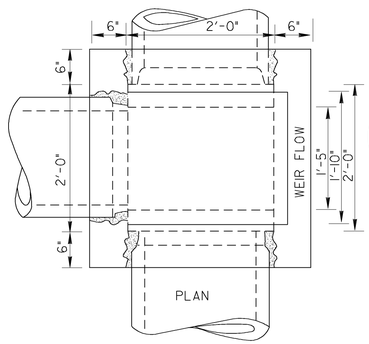

SCALE: 1" =1'

TYPE"B" WITH WEIR

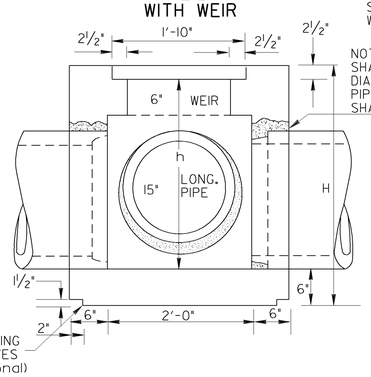

NOTE: OPENING FOR PIPE SHALL BE THE OUTSIDE DIAMETER OF THE REQ'D PIPE PLUS 1" MIN..OPENING SHALL HAVE CORRUGATIONS

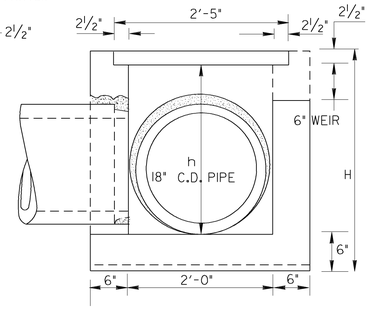

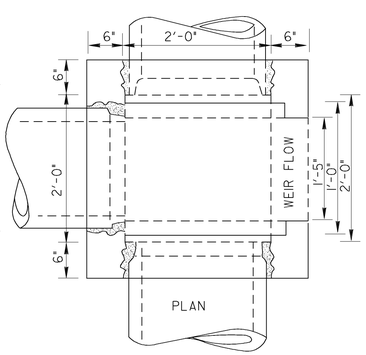

SCALE: 1" =1'

TYPE "C" (WITH OR WITHOUT WEIR)

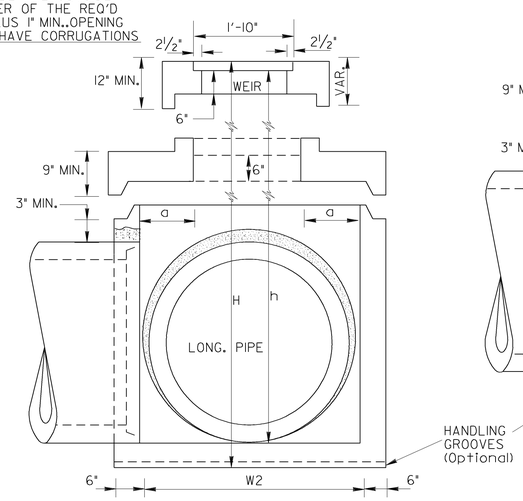

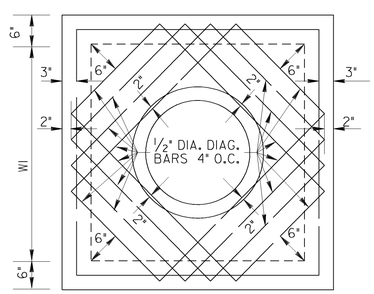

SCALE: ¾" =1

FOR OTHER DETAILS, SEE TYPE "B"

TYPE "E"

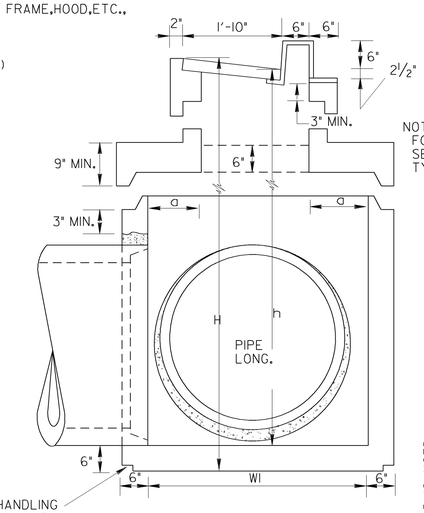

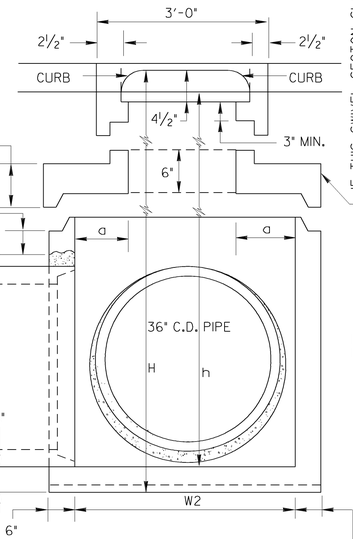

IF THIS SWIVEL SECTON SLAB IS USED TO REDUCE THE W OR W1DIMENSIONS, INCREASE THE MIN. THICKNESS TO 9" AND USE REINF. STEEL SHOWN UNDER TYPE "C"

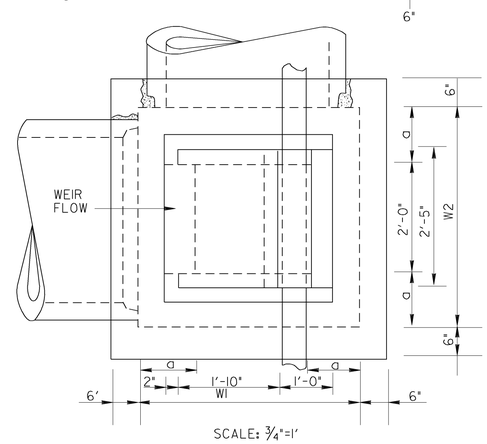

SCALE: ¾"=1'

NOTE:
FOR REINF. STEEL, SEE DETAIL UNDER TYPE "C"

ISOMETRIC VIEW OF DROP INLET TYPE "C" OR "E" FOR PIPES LARGER THAN 18"(WITH OR WITHOUT WEIR)

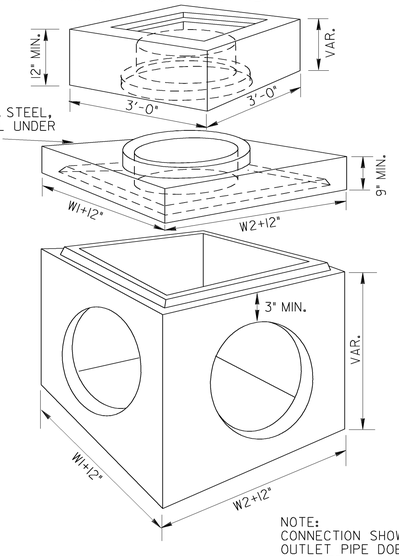

METHOD OF CONNECTING PIPE

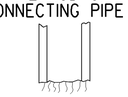

STEP 1

CUT CONCRETE PIPE LEAVING APPROXIMATELY 3" OF REINFORCING MESH EXPOSED.

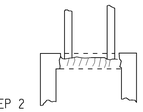

STEP 2

POSITION PIPE APPROXIMATELY 3" INTO OPENING OF WALL.

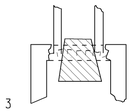

STEP 3

POSITION CONICAL CORE INSIDE OF PIPE AND SEAL WITH GROUT (1/2" MIN. THICKNESS OF GROUT). REMOVE CORE WHEN SET AND RUB GROUT TO SEAL JOINTS.

NOTE:
CONNECTION SHOWN ABOVE FOR USE WHERE CONCRETE OUTLET PIPE DOES NOT HAVE BELL OR HUB END PROVIDED AT STRUCTURE OUTLET.

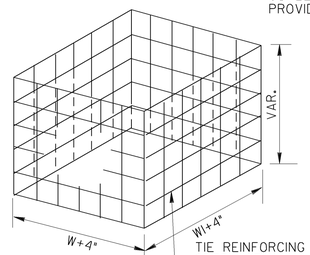

TIE REINFORCING STEEL OF WALL TO BOTTOM SLAB REINF. STEEL.

REINFORCING STEEL FOR BOTTOM SLAB

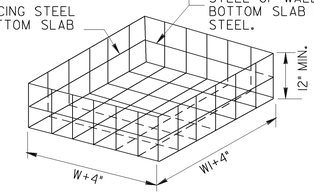

ALTERNATE METHOD OF CONNECTION SKEWED PIPE

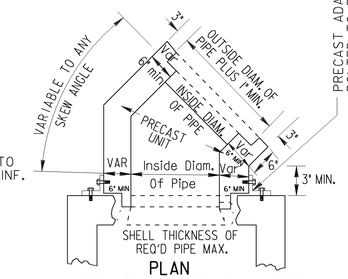

PLAN

ALTERNATE METHODS OF CONNECTING SKEWED PIPES MAY INCLUDE PIPE ELBOWS OR CIRCULAR PRECAST BASE UNITS. SEE SEPARATE STANDARDS.

NOTE: REINFORCING STEEL SHALL BE No. 4 STEEL BARS AT 12" O.C. BOTH WAYS OR EQUIVALENT WIRE FABRIC REINFORCING.

SPECIAL NOTE:
STANDARD 1019A INLETS ARE FOR USE AT LOW POINTS AND WHERE HYDRAULIC LOW CAPACITY GRATES ARE SUFFICIENT. WHERE HIGHER CAPACITY GRATES ARE NEEDED ON A CONTINUOUS GRADE, STANDARD 1019B IS RECOMMENDED.

NOTE:
SEE STANDARD 1019A (BRICK) AND STANDARD 1040 FOR CONSTRUCTION ALTERNATES BRICK MASONRY AND CIRCULAR PRECAST SECTIONS RESPECTIVELY.

DIMENTIONS FOR DROP INLETS

PIPE SIZE	TYPE "A"		TYPE "B"		TYPE "C"				TYPE "E"			
	MIN. h	MIN. H	MIN. h	MIN. H	W1or W2	a	MIN. h	MIN. H	W1or W2	a	MIN. h	MIN. H
15"	2'- 0"	2'-8½"	2'- 7"	3'-3½"	2'- 0"		2'-7"	3'-3½"	2'- 0"		2'-7"	3 - 3½"
18"	2'-3½"	3'- 0"	2'-10"	3'-6½"	2'- 0"		2'-10"	3'-6½"	2'- 0"		2'-10"	3 - 6½"
24"					3'- 0"	0'- 6"	4'- 3½"	5'- 0"	3'- 0"	0'- 6"	4'- 7"	5 - 3 "
30"					3'- 6"	0'- 9"	4'-10½"	5'- 7"	3'- 6"	0'- 9"	5'- 2"	5 - 10"
36"					4'- 0"	1'- 0"	5'- 5½"	6'- 2"	4'- 0"	1'- 0"	5'- 9"	6 - 3 "
42"					4'- 6"	1'- 3"	6'-½	6'- 8"	4'- 6"	1'- 3"	6'- 4"	7 - 0 "
48"					5'- 0"	1'- 6"	6'- 7½"	7'- 3"	5'- 0"	1'- 6"	6'- 11"	7 - 7 "
54"					5'- 6"	1'- 9"	7'- 2½"	7'-10"	5'- 6"	1'- 9"	7'- 6"	8 - 2 "
60"					6'- 0"	2'- 0"	7'- 9½"	8'- 5"	6'- 0"	2'- 0"	8'- 1"	8 - 9 "

DATE	REVISION	BY

DEPARTMENT OF TRANSPORTATION
STATE OF GEORGIA

STANDARD PRECAST DROP INLETS

SCALE AS SHOWN — AUG. 1999

DESIGNED ____ (SUBMITTED) James H. Kennel
DRAWN ____ STATE ROAD & AIRPORT DESIGN ENGINEER
TRACED ____ (APPROVED) Paul L. Pickett
CHECKED ____ CHIEF ENGINEER

NUMBER 1019A PRECAST

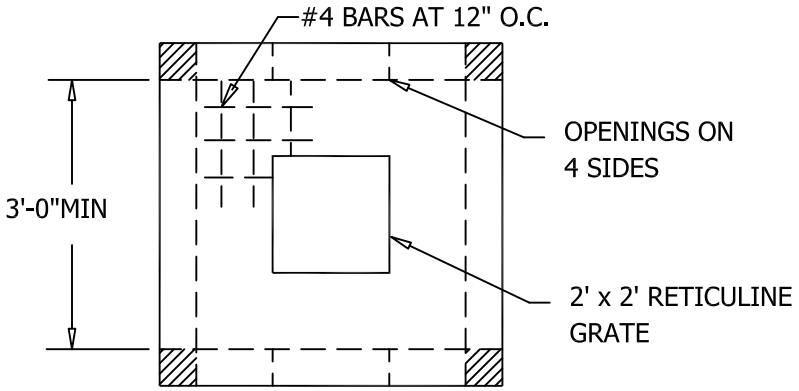

TOP VIEW

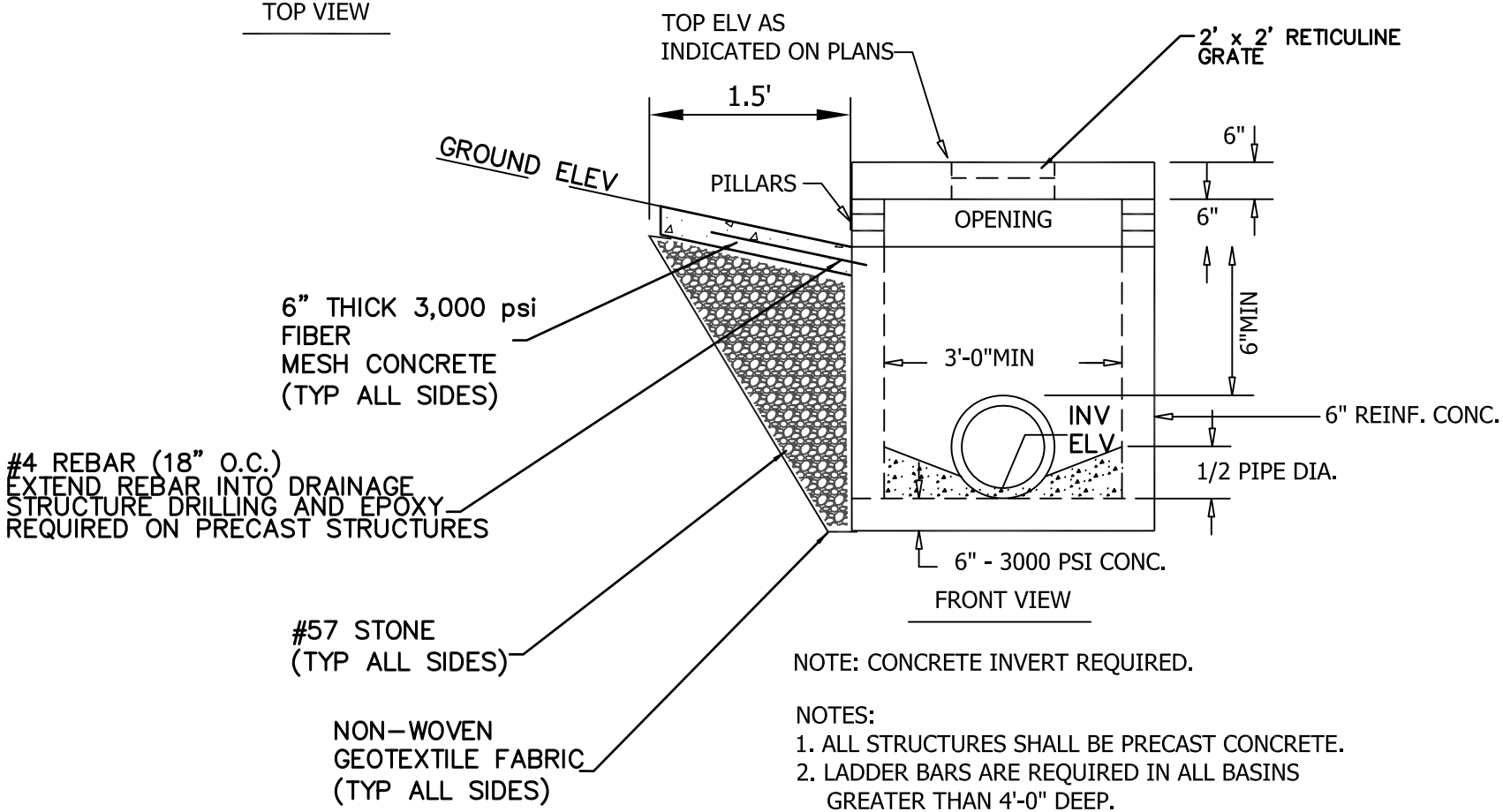

FRONT VIEW

NOTE: CONCRETE INVERT REQUIRED.

NOTES:
1. ALL STRUCTURES SHALL BE PRECAST CONCRETE.
2. LADDER BARS ARE REQUIRED IN ALL BASINS GREATER THAN 4'-0" DEEP.

RAISED LID INLET DETAIL

SCALE: N.T.S.

PEACHTREE CITY
PLAN TO STAY™

STATE	PROJECT NUMBER	SHEET NO.	TOTAL SHEETS
GA.			

STEPS ARE REQUIRED IN ALL MANHOLES OVER 4 FT. IN HEIGHT.

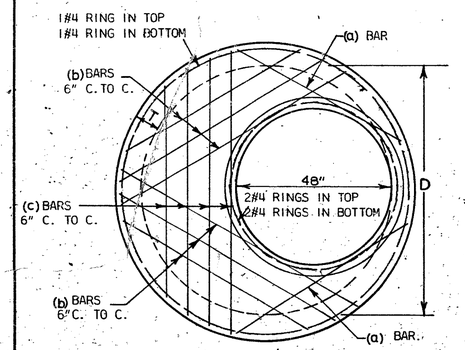

PLAN OF STEEL REINFORCEMENT

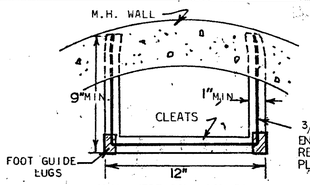

STEP SHALL BE OF TYPE APPROVED BY GA. D.O.T. OFFICE OF MATERIALS AND RESEARCH.

3/8 Ø REINFORCING ROD (MIN) ENCASED IN A CORROSION-RESISTANT RUBBER OR PLASTIC

MIN. VERTICAL LOAD RESISTANCE = 400 LBS.
MIN. PULLOUT RESISTANCE = 700 LBS.

STEP DETAIL

D	Y MIN.	(a) BARS No.	(a) BARS SIZE	(b) BARS No.	(b) BARS SIZE	(c) BARS No.	(c) BARS SIZE
60"	8"	2	#6	4	#6	2	#6
72"	9"	2	#6	6	#6	4	#6

NOTE: 10 FT. MAXIMUM ALLOWANCE COVER ABOVE TOP OF REDUCER SLABS. REDUCER CONES TO BE USED WHERE REDUCER SLABS NOT PERMITTED.

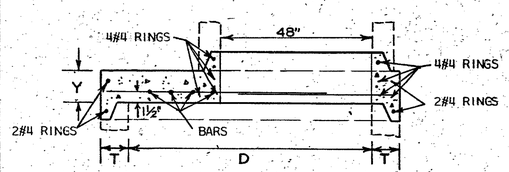

SECTIONAL DETAIL
REDUCER SLAB

D = INSIDE DIAMETER OF BASE UNIT

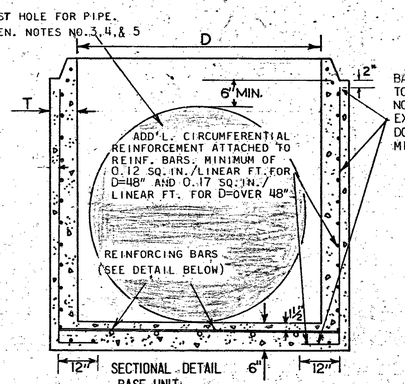

BASE UNIT SHALL CONTAIN IN ADDITION TO A.S.T.M. C-478 REINFORCEMENT, TWO NO. 5 VERTICAL BARS AT EACH OPENING EXTENDING FROM WITHIN 2" OF JOINT DOWN WALL INTO BOTTOM SLAB AS SHOWN MINIMUM 2" CLEARANCE ALL AROUND.

D	T (MIN)
48"	5"
60"	5"
72"	6"

SECTIONAL DETAIL
BASE UNIT

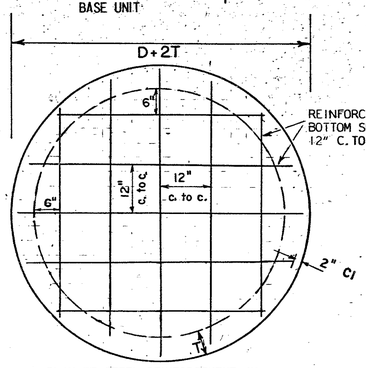

REINFORCING BARS IN TOP OF BOTTOM SLAB MAXIMUM SPACING 12" C. TO C. BOTH WAYS

D	BAR SIZE
48"	#5
60"	#6
72"	#6

PLAN OF STEEL REINFORCEMENT IN BOTTOM SLAB

BASE UNIT

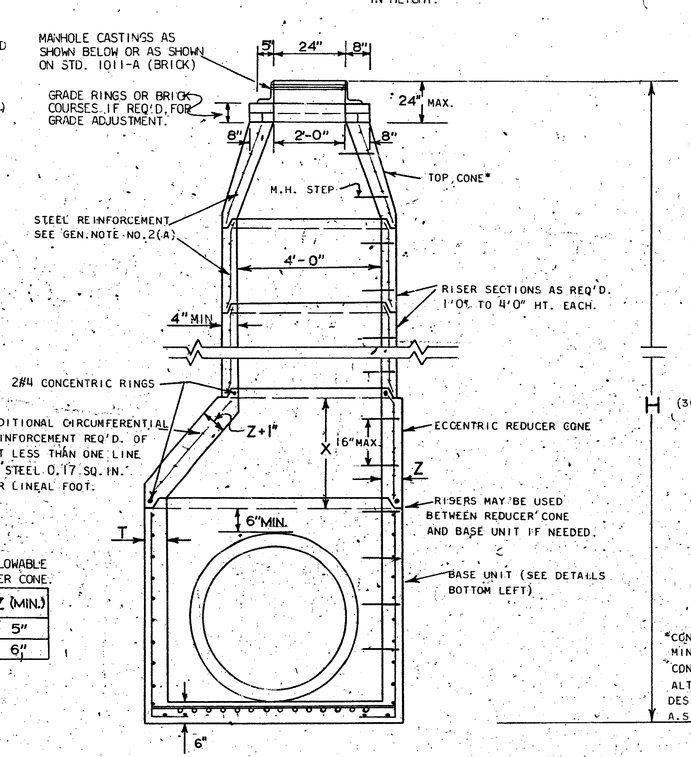

NOTE:
25 FT. MAXIMUM ALLOWABLE COVER ABOVE REDUCER CONE.

D	X (MIN.)	Z (MIN.)
60"	1'-6"	5"
72"	3'-0"	6"

SECTIONAL DETAIL
(MANHOLE WITH BASE UNIT OF D=OVER 48")

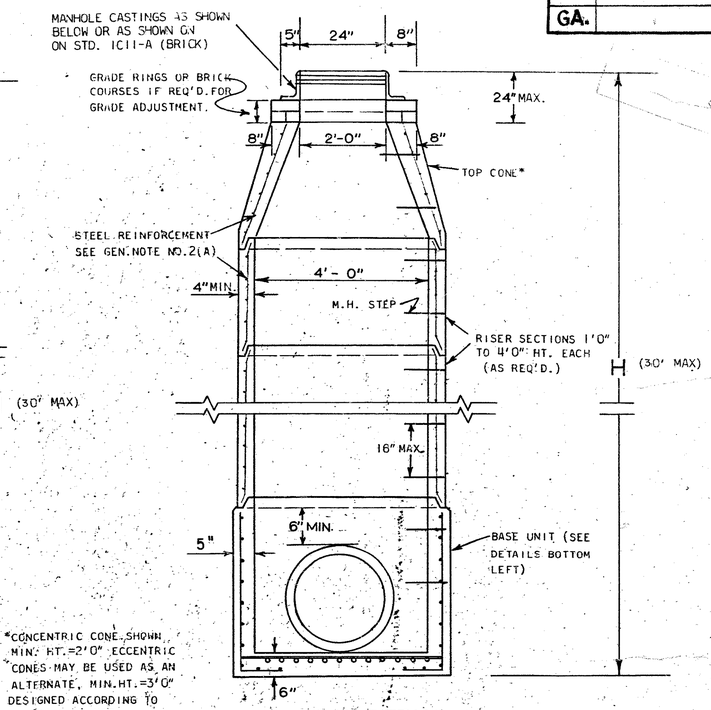

*CONCENTRIC CONE SHOWN MIN. HT. = 2'0" ECCENTRIC CONES MAY BE USED AS AN ALTERNATE, MIN. HT. = 3'0" DESIGNED ACCORDING TO A.S.T.M. C-478

SECTIONAL DETAIL
(MANHOLE WITH BASE UNIT OF D=48")

GENERAL NOTES:

1. MATERIALS: ALL CONCRETE, STEEL BARS AND STEEL WIRE REINFORCEMENT SHALL COMPLY WITH SECTION 866.02 OF GEORGIA STANDARD SPECIFICATIONS AND SPECIAL PROVISION WHICH MODIFY SECTION 866.02.
2. REINFORCEMENT:
   (A) PLACEMENT AND DESIGN OF STEEL REINFORCEMENT IN RISER UNITS, CONE SECTIONS, GRADE RINGS AND JOINTS SHALL BE IN COMPLIANCE WITH A.S.T.M. C-478 UNLESS OTHERWISE NOTED.
   (B) BASE UNITS, REDUCER SLABS AND FLAT TOP SLABS SHALL HAVE STEEL REINFORCEMENT AS SHOWN IN DETAILS AT LEFT.
3. OPENINGS FOR PIPES LARGER THAN 6 INCHES IN DIAMETER ARE TO BE PRECAST. A MINIMUM OF 6" ALONG THE INTERCIRCUMFERENCE IS TO REMAIN BETWEEN THE EXTREMITIES OF HOLE FOR ADJACENT PIPE IN ANY SINGLE UNIT. A MINIMUM OF TWO REINF. BARS SHALL REMAIN IN WALL BETWEEN ANY TWO OPENINGS.
4. THE CONTRACTOR WILL FURNISH THE FABRICATOR WITH THE ANGLE OF ALINEMENT AND SIZE OF ALL PIPES TO ENTER MANHOLE AND THE HEIGHT OF STRUCTURE.
5. BASE UNITS SHALL HAVE SUFFICIENT HEIGHT TO ALLOW FOR MINIMUM OF 6" OF WALL BETWEEN TOP OF HIGHEST OPENING FOR PIPES AND BOTTOM OF JOINT.
6. INVERT CHANNELS:
   (A) FOR SANITARY SEWER MANHOLES SEE GEORGIA STANDARD SPECIFICATIONS FOR CHANNEL REQUIREMENTS.
   (B) FOR STORM SEWER MANHOLES, CHANNELS BUILT TO SUIT PIPE SIZES AND LOCATION. HEIGHT OF CHANNEL EQUAL TO 1/2 DIAMETER OF OUTLET PIPE. CHANNEL BUILT FROM GROUT OR CLASS "A" CONCRETE.
7. PIPES ARE TO BE EXTENDED INTO STRUCTURE WALL A MINIMUM OF 4" BUT SHOULD NOT EXTEND BEYOND INTERIOR WALL OF STRUCTURE.
8. ALL JOINTS, EXCEPT FOR GRADE RINGS AND TOP OF TOP CONE, SHALL HAVE TONGUE AND GROOVE SECTION.

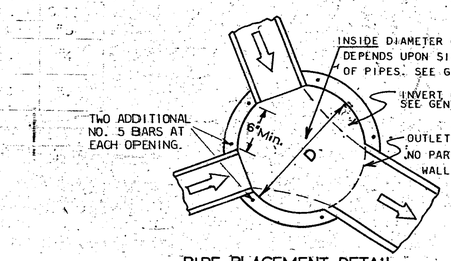

PIPE PLACEMENT DETAIL

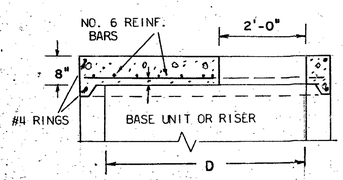

SECTIONAL DETAIL

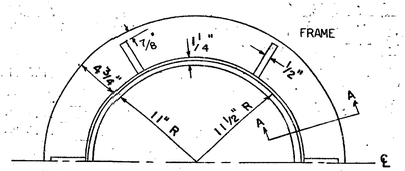

APPROX. WEIGHTS: FRAME - 200 LBS.
COVER - 135 LBS.

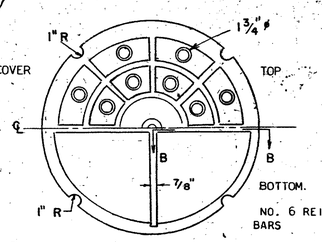

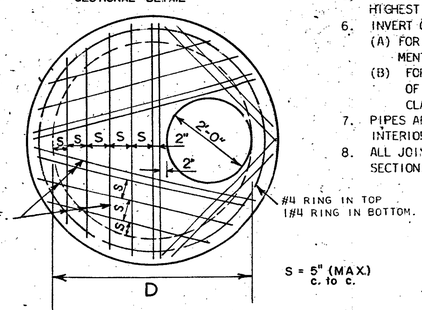

PLAN OF REINFORCING STEEL

FLAT TOP SLAB IS FOR USE IN AREA OF MINIMUM COVER ONLY. MAXIMUM HEIGHT OF MANHOLE WITH FLAT TOP SLAB SHALL BE 4 FT. ABOVE TOP OF HIGHEST ENTERING PIPE.

FLAT TOP SLAB

NOTE: FRAME AND COVER TO BE FITTED BEFORE LEAVING SHOP.

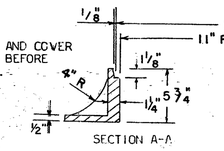

SECTION A-A

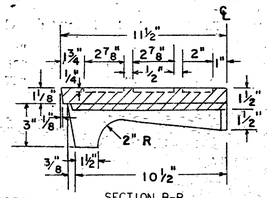

SECTION B-B

MANHOLE CASTINGS (C.I.)

REVISIONS	BY	DATE
CASTINGS & BASE U.	RMU	6-1-75

DEPARTMENT OF TRANSPORTATION
STATE OF GEORGIA

STANDARD
PRECAST REINFORCED CONCRETE MANHOLE

NO SCALE — AUGUST, 1973

DESIGNED: GCL
DRAWN: RMU
CHECKED: JEC

SUBMITTED: J. S. Krueger
STATE ROAD DESIGN ENGINEER

APPROVED:
STATE HIGHWAY ENGINEER

NUMBER 1011-A
PRECAST

STATE	PROJECT NUMBER	SHEET NO.	TOTAL SHEETS
GA.			

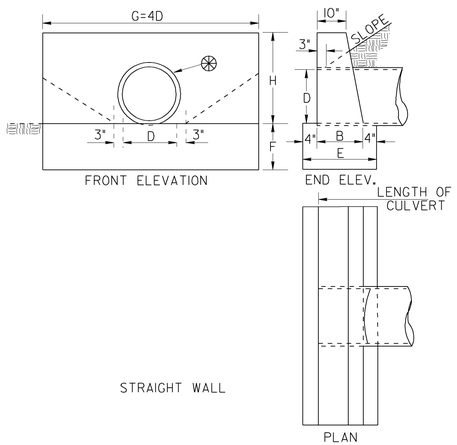

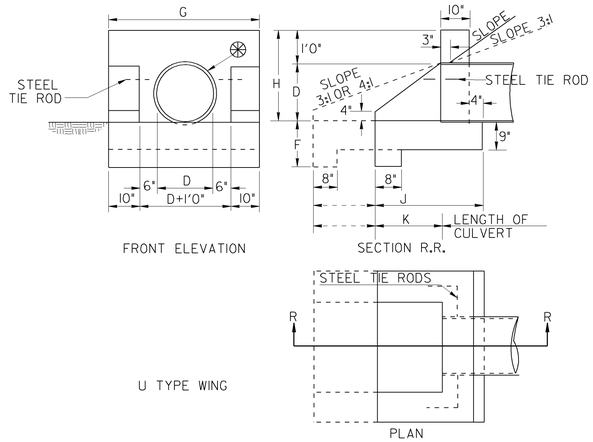

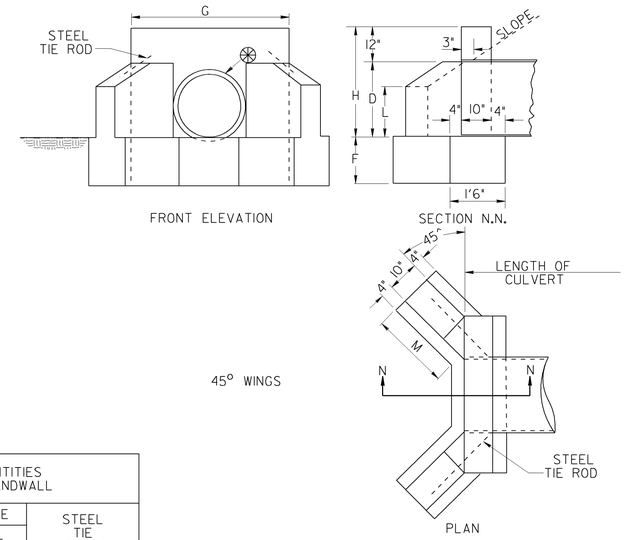

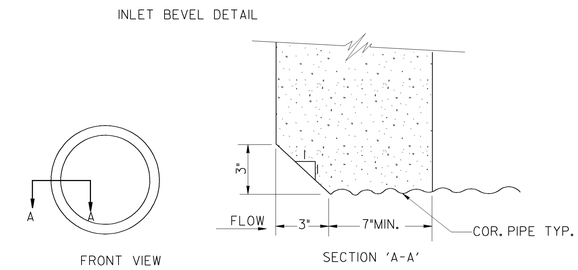

DIMENSIONS							QUANTITIES ONE STRAIGHT ENDWALL				CONC. IN WALL & FTG. FOR EACH ADDL. PIPE LINE
OPENING		WALL			FOOTING		CLASS "B" CONCRETE				
D	AREA SQ. FT.	G	H	B	E	F	CUBIC FEET WALL	CUBIC FEET FOOT	TOTAL CU. FT.	TOTAL CU.YD.	CU.YD.
12"	0.8	4'0"	2'0"	1'2"	1'10"	1'0"	7.2	7.3	14.5	0.54	0.25
15"	1.2	5'0"	2'3"	1'2"	1'10"	1'2"	9.9	10.7	20.6	0.76	0.36
18"	1.8	6'0"	2'6"	1'3"	1'11"	1'3"	13.6	14.4	28.0	1.04	0.48
24"	3.1	8'0"	3'0"	1'4"	2'0"	1'4"	22.3	21.3	43.6	1.62	0.74
30"	4.9	10'0"	3'6"	1'6"	2'2"	1'6"	34.7	32.5	67.2	2.49	1.13
36"	7.1	12'0"	4'0"	1'8"	2'4"	1'8"	50.5	46.7	97.2	3.60	1.62
42"	9.6	14'0"	4'6"	1'10"	2'6"	2'0"	70.3	70.0	140.3	5.20	2.13
48"	12.6	16'0"	5'0"	2'1"	2'9"	2'0"	96.9	88.0	184.9	6.85	2.58
54"	16.0	18'0"	5'6"	2'4"	3'0"	2'0"	129.4	108.0	237.4	8.79	3.07
60"	19.6	20'0"	6'0"	2'6"	3'2"	2'0"	164.6	126.7	291.3	10.79	3.53

FOR EACH ADDITIONAL PIPE LINE, ADD TO G: OD+(ID OR 3 FEET, WHICHEVER IS SMALLER)

DIMENSIONS							QUANTITIES ONE "U" ENDWALL				
OPENING		WALL			FOOTING		CLASS "B" CONCRETE				STEEL TIE RODS
D	AREA SQ.FT	G	H	K	F	J	CUBIC FEET WALL	CUBIC FEET FOOT	TOTAL CU.FT.	TOTAL CU.YD.	
2:1 FILL SLOPES											
12"	0.8	3'8"	2'0"	1'0"	1'3"	2'2"	6.6	7.3	13.9	0.52	NONE
15"	1.2	3'11"	2'3"	1'5"	1'3"	2'7"	8.3	9.1	17.4	0.64	NONE
18"	1.8	4'2"	2'6"	1'9"	1'3"	2'11"	9.9	10.7	20.6	0.76	NONE
24"	3.1	4'8"	3'0"	2'6"	1'6"	3'8"	13.9	15.5	29.4	1.09	2-¾"DIA.x2'0"
30"	4.9	5'2"	3'6"	3'3"	1'6"	4'5"	18.7	20.0	38.7	1.43	2-¾"DIA.x2'0"
36"	7.1	5'8"	4'0"	4'0"	1'9"	5'2"	21.2	26.2	50.4	1.87	2-¾"DIA.x2'0"
42"	9.6	6'2"	4'6"	4'9"	2'0"	5'11"	30.3	33.2	63.5	2.35	2-¾"DIA.x2'6"
48"	12.6	6'8"	5'0"	5'6"	2'0"	6'8"	37.3	39.6	76.9	2.85	2-¾"DIA.x3'0"
54"	16.0	7'2"	5'6"	6'3"	2'0"	7'5"	44.2	45.9	90.1	3.33	2-¾"DIA.x3'6"
60"	19.6	7'8"	6'0"	7'0"	2'0"	8'2"	51.1	49.1	100.2	3.71	2-¾"DIA.x4'0"
3:1 FILL SLOPES											
12"	0.8	3'8"	2'0"	2'0"	1'3"	3'2"	7.7	9.9	17.6	0.65	NONE
15"	1.2	3'11"	2'3"	2'9"	1'3"	3'11"	10.0	12.8	22.8	0.84	NONE
18"	1.8	4'2"	2'6"	3'6"	1'3"	4'8"	12.5	16.0	28.5	1.06	NONE
24"	3.1	4'8"	3'0"	5'0"	1'6"	6'2"	18.8	24.0	42.8	1.58	2-¾"DIA.x2'0"
30"	4.9	5'2"	3'6"	6'6"	1'6"	7'8"	26.3	32.3	58.6	2.17	2-¾"DIA.x2'0"
36"	7.1	5'8"	4'0"	8'0"	1'9"	9'2"	35.1	42.8	77.9	2.89	2-¾"DIA.x2'0"
42"	9.6	6'2"	4'6"	9'6"	2'0"	10'8"	45.4	54.5	99.9	3.70	2-¾"DIA.x2'6"
48"	12.6	6'8"	5'0"	11'0"	2'0"	12'2"	56.9	66.5	123.4	4.57	2-¾"DIA.x3'0"
54"	16.0	7'2"	5'6"	12'6"	2'0"	13'8"	66.7	79.5	146.2	5.41	2-¾"DIA.x3'6"
60"	19.6	7'8"	6'0"	13'4"	2'0"	17'2"	81.0	87.9	168.9	6.25	2-¾"DIA.x4'0"
4:1 FILL SLOPES											
12"	0.8	3'8"	2'0"	2'8"	1'3"	3'10"	8.4	11.8	20.2	0.75	NONE
15"	1.2	3'11"	2'3"	3'8"	1'3"	4'10"	11.2	15.5	26.6	0.98	NONE
18"	1.8	4'2"	2'6"	4'8"	1'3"	5'10"	14.3	19.6	33.9	1.26	NONE
24"	3.1	4'8"	3'0"	6'8"	1'6"	7'10"	22.0	29.8	51.8	1.92	2-¾"DIA.x2'0"
30"	4.9	5'2"	3'6"	8'8"	1'6"	9'10"	31.3	40.7	72.0	2.67	2-¾"DIA.x2'0"
36"	7.1	5'8"	4'0"	10'8"	1'9"	11'10"	42.5	54.1	96.6	3.58	2-¾"DIA.x2'0"
42"	9.6	6'2"	4'6"	12'8"	2'0"	13'10"	55.4	69.2	124.6	4.61	2-¾"DIA.x2'6"
48"	12.6	6'8"	5'0"	14'8"	2'0"	15'10"	70.0	84.8	154.8	5.73	2-¾"DIA.x3'0"
54"	16.0	7'2"	5'6"	16'8"	2'0"	17'10"	86.4	101.9	188.3	6.97	2-¾"DIA.x3'6"
60"	19.6	7'8"	6'0"	18'8"	2'0"	19'10"	104.7	120.5	225.2	8.34	2-¾"DIA.x4'0"

DIMENSIONS							QUANTITIES ONE ENDWALL WITH 45° WING WALLS				
OPENING		WALL			FOOTING		CLASS "B" CONCRETE				STEEL TIE RODS
D	AREA SQ. FT.	H	G	L	M	F	CUBIC FEET WALL	CUBIC FEET FOOT	TOTAL CU.FT.	TOTAL CU.YD.	
2:1 SLOPES											
18"	1.8	2'6"	3'10"	1'2"	1'7"	1'3"	9.3	10.7	20.0	0.74	NONE
24"	3.1	3'0"	4'4"	1'5"	2'1"	1'4"	13.1	14.4	27.5	1.02	2-¾"DIA.x2'0"
30"	4.9	3'6"	4'10"	1'9"	2'5"	1'6"	17.4	18.8	36.7	1.34	2-¾"DIA.x2'0"
36"	7.1	4'0"	5'4"	2'0"	2'11"	1'8"	22.6	24.6	47.2	1.75	2-¾"DIA.x3'0"
42"	9.6	4'6"	5'10"	2'3"	3'6"	2'0"	29.1	34.6	63.7	2.36	2-¾"DIA.x3'0"
48"	12.6	5'0"	6'4"	2'6"	4'0"	2'0"	35.9	39.1	75.0	2.78	2-¾"DIA.x3'0"
54"	16.0	5'6"	6'10"	2'9"	4'6¼"	2'0"	42.9	46.6	89.5	3.31	2-¾"DIA.x3'0"
60"	19.6	6'0"	7'4"	3'0"	5'0½"	2'0"	51.8	51.1	102.9	3.81	2-¾"DIA.x3'0"
3:1 SLOPES											
18"	1.8	2'6"	3'10"	1'2"	1'9"	1'3"	10.7	14.5	25.2	0.93	NONE
24"	3.1	3'0"	4'4"	1'5"	2'10"	1'4"	16.6	17.8	34.4	1.27	2-¾"DIA.x2'0"
30"	4.9	3'6"	4'10"	1'9"	3'6"	1'6"	22.9	24.4	47.3	1.71	2-¾"DIA.x2'0"
36"	7.1	4'0"	5'4"	2'1"	4'3"	1'8"	30.2	32.0	62.2	2.30	2-¾"DIA.x3'0"
42"	9.6	4'6"	5'10"	2'5"	4'11"	2'0"	38.8	44.0	82.8	3.07	2-¾"DIA.x3'0"
48"	12.6	5'0"	6'4"	2'8"	5'6"	2'0"	47.5	48.6	96.1	3.56	2-¾"DIA.x3'0"
54"	16.0	5'6"	6'10"	3'2"	6'1"	2'0"	57.0	53.4	110.4	4.09	2-¾"DIA.x3'0"
60"	19.6	6'0"	7'4"	3'6"	6'9"	2'0"	68.5	59.1	127.6	4.73	2-¾"DIA.x3'0"

METHOD OF EXTENDING PIPE AND RETAINING EXISTING HEADWALL

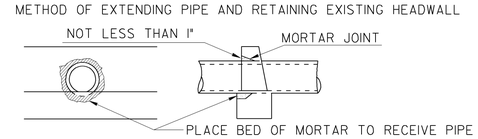

CONCRETE WITHIN THE HATCHED AREA TO BE REMOVED BY CHIPPING OR IN A MANNER APPROVED BY THE ENGINEER, FORMING A RECESS NO LESS THAN 1" LARGER THAN THE OUTSIDE DIMENSION OF THE PIPE.

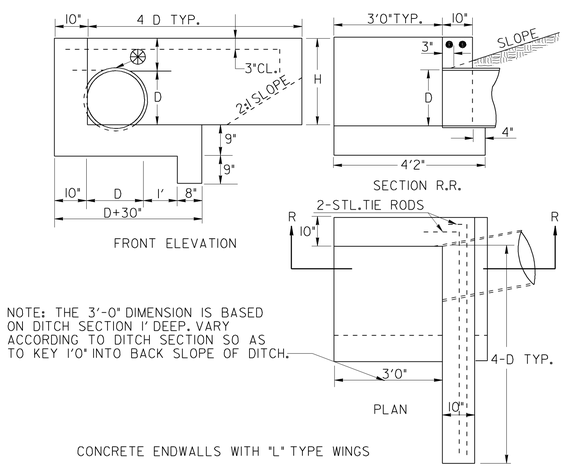

NOTE: THE 3'-0" DIMENSION IS BASED ON DITCH SECTION 1' DEEP. VARY ACCORDING TO DITCH SECTION SO AS TO KEY 1'0" INTO BACK SLOPE OF DITCH.

CONCRETE ENDWALLS WITH "L" TYPE WINGS

NOTE: THESE QUANTITIES WILL VARY ACCORDING TO DITCH SECTION AND ARE TO BE USED FOR ESTIMATING PURPOSES ONLY. PAYMENT TO BE MADE ACCORDING TO QUANTITIES MEASURED AS ACTUALLY PLACED.

DIMENSIONS					QUANTITIES ONE "L" ENDWALL	
D	AREA SQ.FT.	H MIN.	4D TYP.	D+30 TYP.	CU. YD. CONC.	STEEL TIE RODS
15"	1.2	2'3"	5'0"	3'9"	1.08	2-¾"DIA.x5'0"
18"	1.8	2'6"	6'0"	4'0"	1.24	2-¾"DIA.x6'0"
24"	3.1	3'0"	8'0"	4'6"	1.59	2-¾"DIA.x8'0"
30"	4.9	3'6"	10'0"	5'0"	2.00	2-¾"DIA.x10'0"
36"	7.1	4'0"	12'0"	5'6"	2.46	2-¾"DIA.x12'0"
42"	9.6	4'6"	14'0"	6'0"	2.98	2-¾"DIA.x14'0"
48"	12.6	5'0"	16'0"	6'6"	3.53	2-¾"DIA.x16'0"
54"	16.0	5'6"	18'0"	7'0"	4.13	2-¾"DIA.x18'0"
60"	19.6	6'0"	20'0"	7'6"	4.85	2-¾"DIA.x20'0"

3:1 FILL SLOPES

NOTE:
QUANTITIES OF CONCRETE ARE BASED ON INSIDE DIAMETER OF PIPE. NO DEDUCTIONS SHALL BE MADE FOR SHELL THICKNESS OR SKEW OF PIPE IN COMPUTING PAY QUANTITIES.

SECTION SHOWING MINIMUM COVER OVER CULVERTS

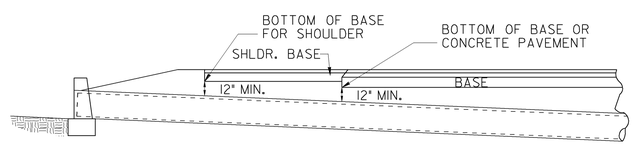

NOTE: GRADE GENERALLY TO FOLLOW SLOPE OF STREAM.

⊛ IF PIPE HAS NEITHER A GROOVE NOR A SPIGOT AT ITS INLET, AN INLET BEVEL WILL BE REQ'D.

NOTE TO DESIGNER

THIS STANDARD IS LIMITED FOR USE ONLY AT SPECIAL CONDITIONS, OTHERWISE, SEE CURRENT STANDARDS 1120 & 1125.

HEADWALLS ARE NOT TO BE PLACED INSIDE THE CLEAR ZONE.

DATE	REVISION	BY

DEPARTMENT OF TRANSPORTATION
STATE OF GEORGIA

STANDARD
PIPE CULVERT
CONCRETE HEADWALL

NO SCALE

REV. & REDR. AUG. 1999

DESIGNED
TRACED
CHECKED

(SUBMITTED) STATE ROAD & AIRPORT DESIGN ENGINEER
(APPROVED) CHIEF ENGINEER

NUMBER 1001-B

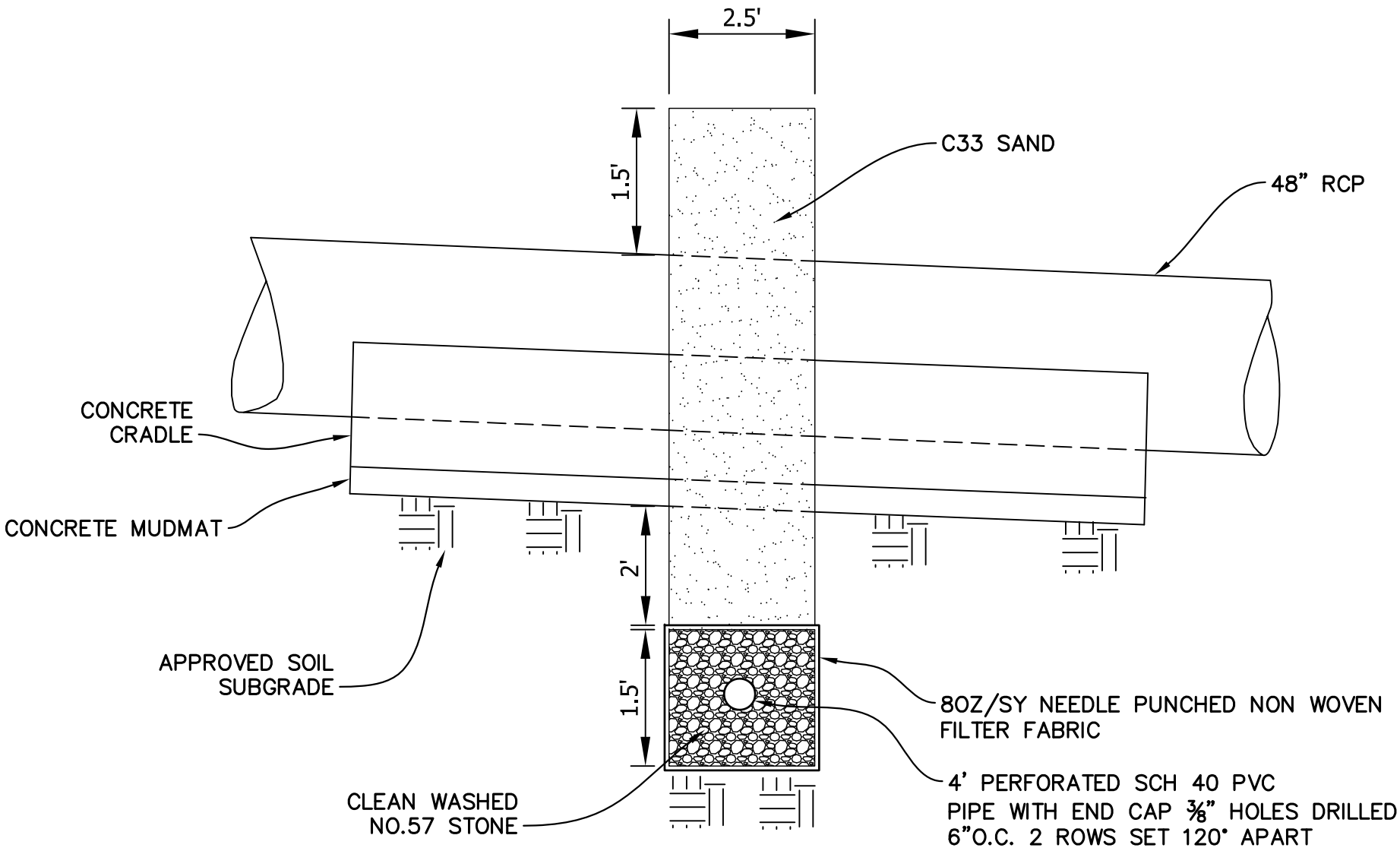

COLLAR DRAIN DETAIL

SCALE: N.T.S.

PEACHTREE CITY
PLAN TO STAY™

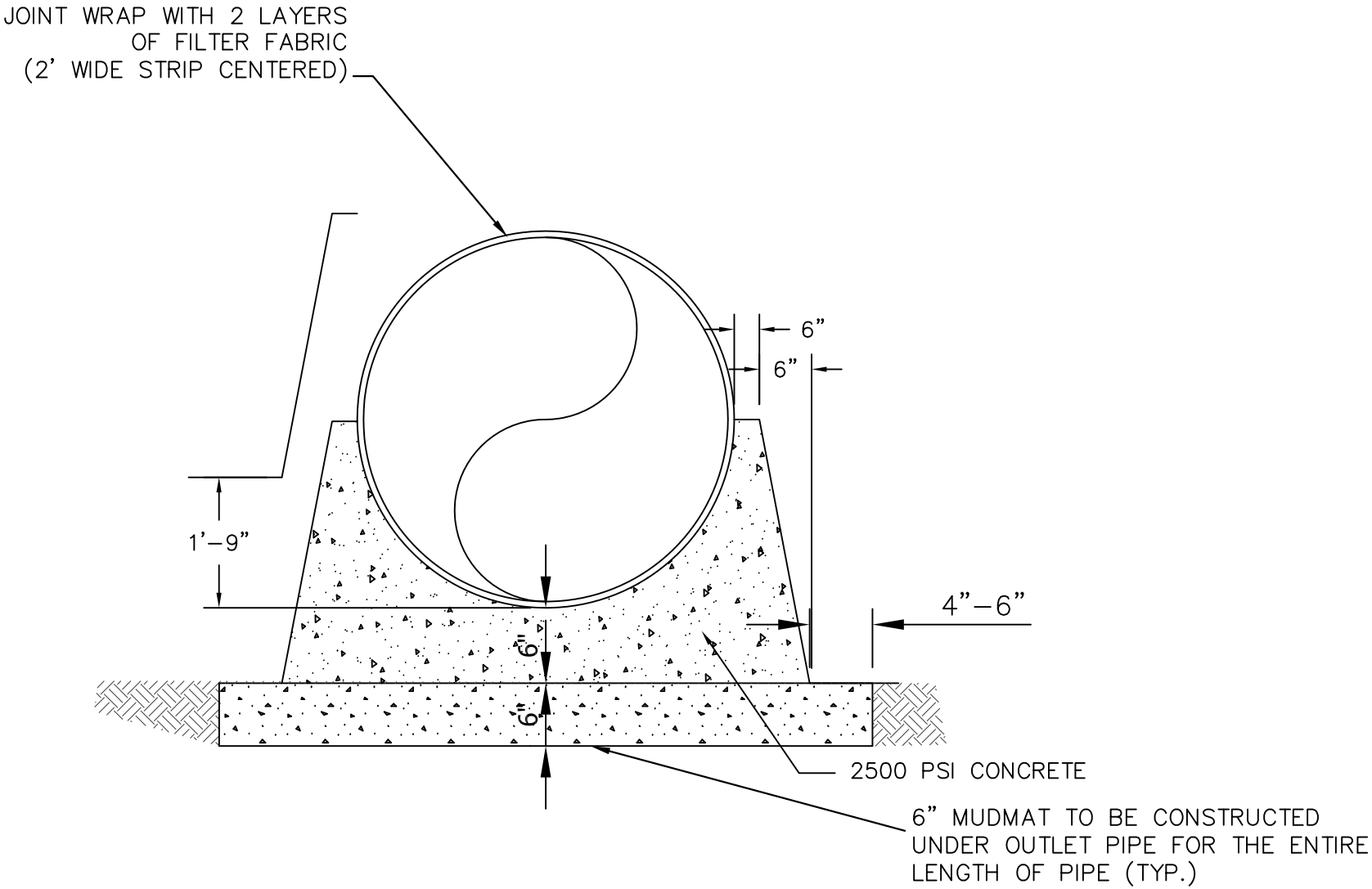

NOTES:
CONTACTOR SHALL USE CONCRETE BRICKS OR SOLID PRECAST CONCRETE BLOCKS TO SUPPORT THE PIPE DURING CONCRETE PLACEMENT.
CONTACTOR SHALL INSURE THAT PIPE DOES NOT FLOAT DURING PLACEMENT OF THE CONCRETE CRADLE.

PIPE CRADLE DETAIL

SCALE: N.T.S.

PEACHTREE CITY
PLAN TO STAY™

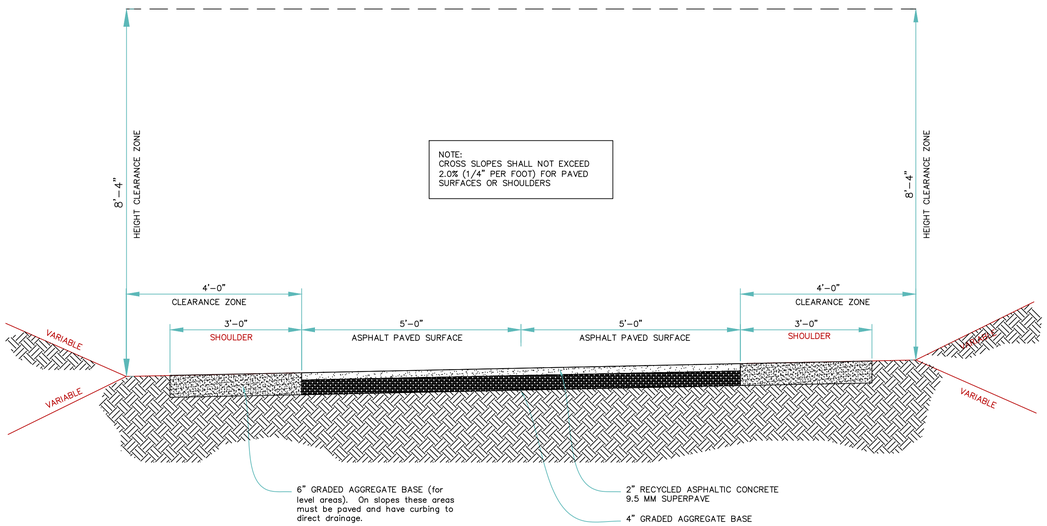

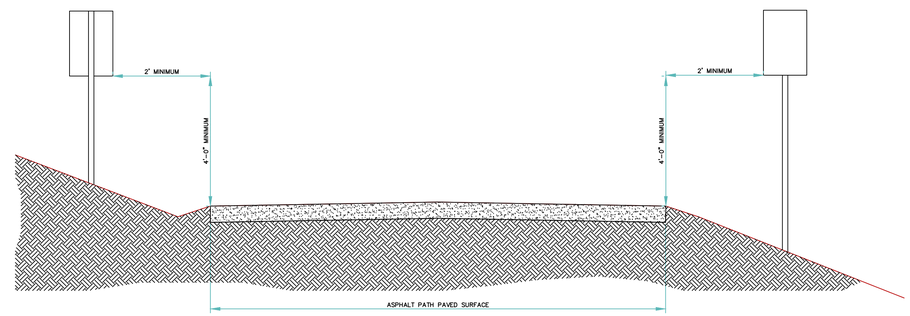

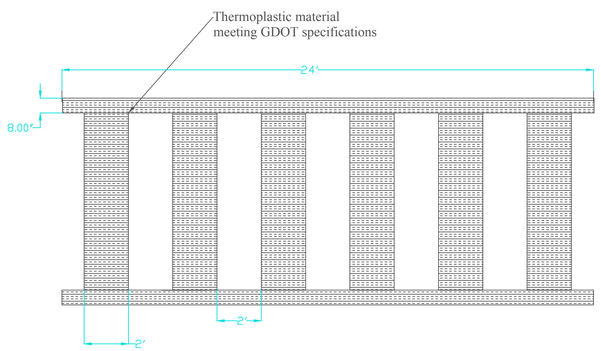

Multi-Use Path Crossing Striping Detail

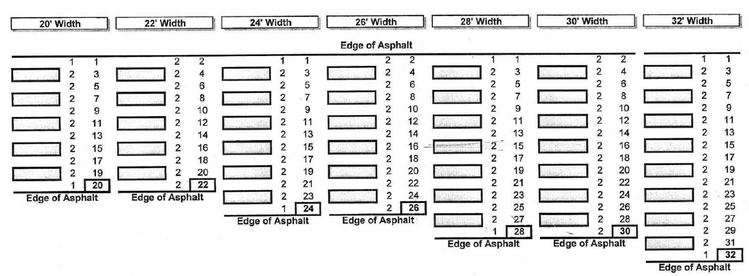

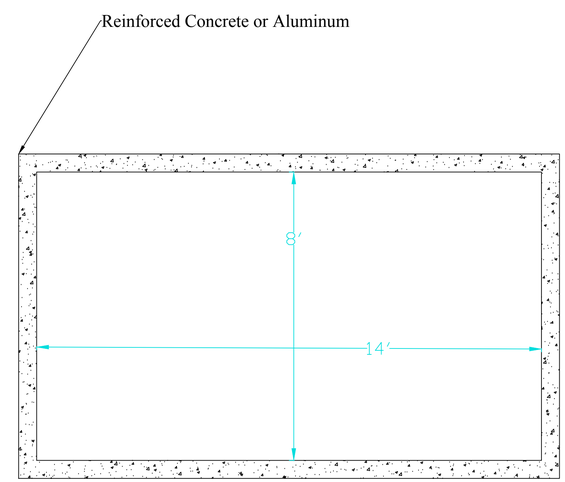

Multi-Use Path Tunnel Detail

Know what's below. Call before you dig.

General Notes

No.	Revision/Issue	Date
2.0	Added tunnel materials	11-16-16
1.0	striping variants and widened shoulder.	8-3-15

Seal/Date

Firm Name and Address

Peachtree City Engineering Department

PEACHTREE CITY PLAN TO STAY

Project Name and Address

Multi-Use Path Details

Project: City Details

Date

Scale: N.T.S.

Sheet: 1 of 1

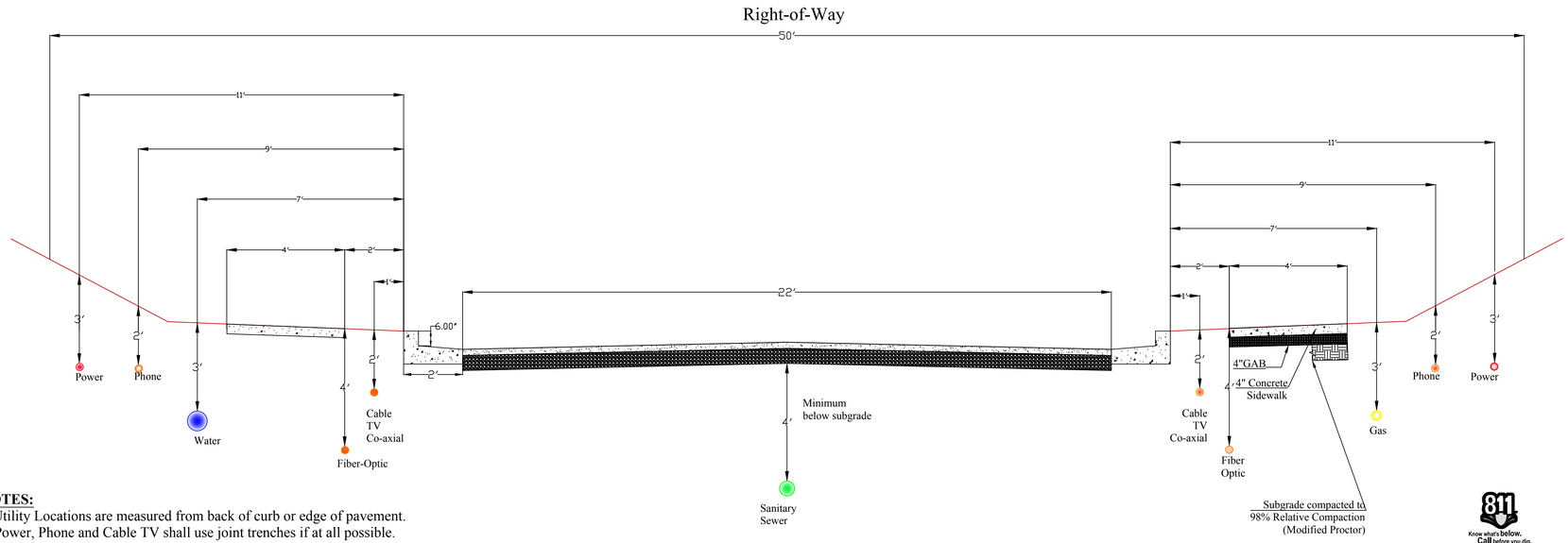

NOTES:
1. Utility Locations are measured from back of curb or edge of pavement.
2. Power, Phone and Cable TV shall use joint trenches if at all possible.
3. Keep Gas and Water on opposite sides of the road.
4. Pavement widths and rights-of-ways vary according to road classification. This detail is for subdivision streets.

Standard Utility Locations

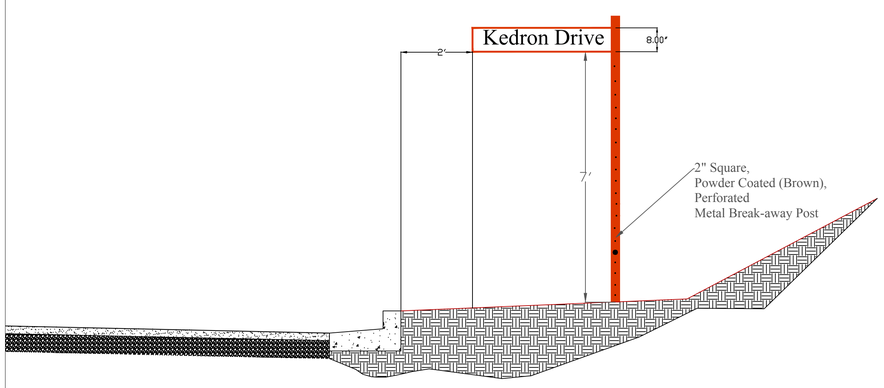

Notes:
1. All signage must meet current MUTCD standards.
2. Signs shall be an aluminum backed sign a minumum of $\frac{1}{8}$" thick.
3. Minimum letter sizes shall be 6" capital letters and $4\frac{1}{2}$" for lower case for Street Name Signs on streets ≤ 40 mph.
4. Street Name Signs shall be white letters on brown background.
5. The back of all signs shall be painted brown.

Standard Sign Locations

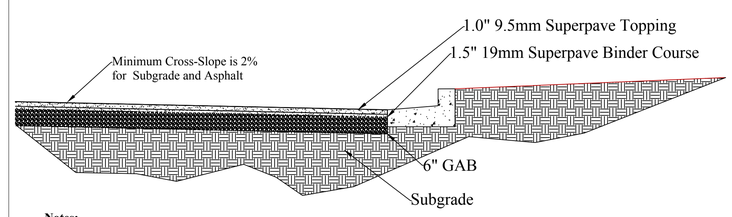

Notes:
1. Proof-roll required to be done in presence of City representative for both final Subgrade and GAB.
2. Proof-rool must be done with tandum dump truck loaded with minimum 18-tons of stone. Load ticket must be provided.
3. Any areas not passing proof-roll shall be dug up and repaired to City satisfaction.
4. Fill used to build up Subgrade shall be compacted and tested according to latest specifications in Peachtree City Local Design Manual.
5. French drains may be required in all sags in the roadway and in other areas determined by City Engineer.
6. Prime and tac will be required according to latest Georgia Department of Transportation (GDOT) specifications.
7. All permanent striping will be thermoplastic meeting latest GDOT specifications.

Residential Street Paving Section

General Notes

No.	Revision/Issue	Date
1.0	Issued	11/16/16

Seal/Date

Firm Name and Address
Peachtree City
Engineering Department
PEACHTREE CITY
PLAN TO STAY

Project Name and Address
Residential Street Details

Project: City Details
Date:
Scale: N.T.S.
Sheet: 1 of 1

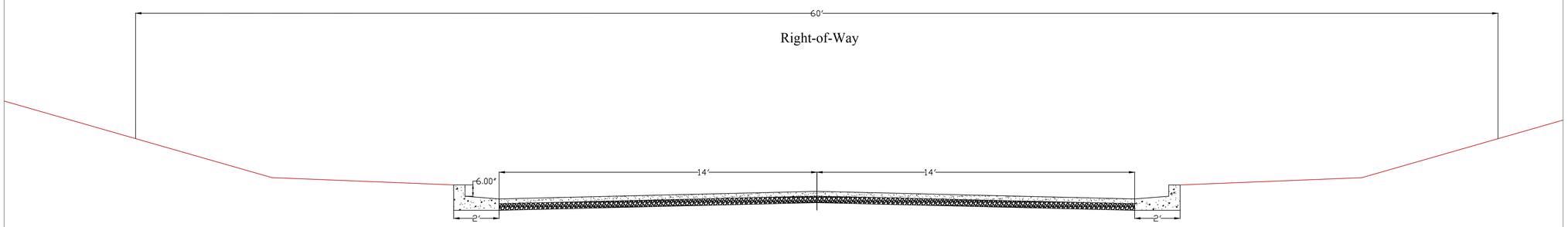

Standard Cross-Section

NOTES:

1. Utility Locations are measured from back of curb or edge of pavement.
2. Power, Phone and Cable TV shall use joint trenches if at all possible.
3. Keep Gas and Water on opposite sides of the road.
4. Pavement widths and rights-of-ways vary according to road classification. This detail is for Village/Neighborhood Collectors and Commercial Streets.

NOTE: Neighborhood Collector pavement width is only 24'

811 Know what's below. Call before you dig.

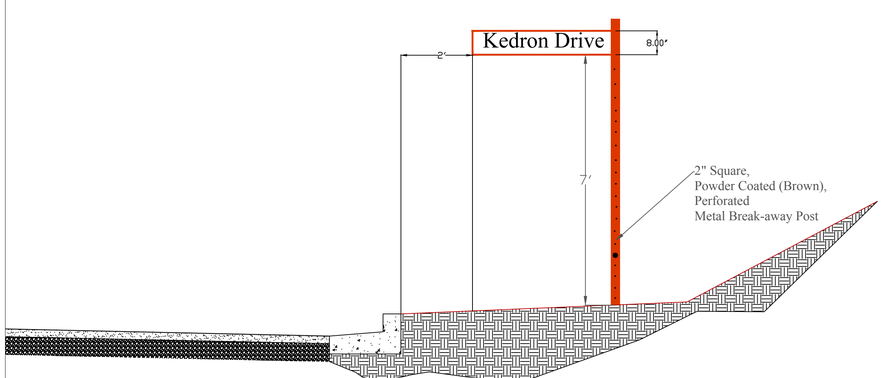

Standard Sign Locations

Notes:

1. All signage must meet current MUTCD standards.
2. Signs shall be an aluminum backed sign a minumum of $\frac{1}{8}$" thick.
3. Minimum letter sizes shall be 6" capital letters and $4\frac{1}{2}$" for lower case for Street Name Signs on streets ≤ 40 mph.
4. Street Name Signs shall be white letters on brown background.
5. The back of all signs shall be painted brown.

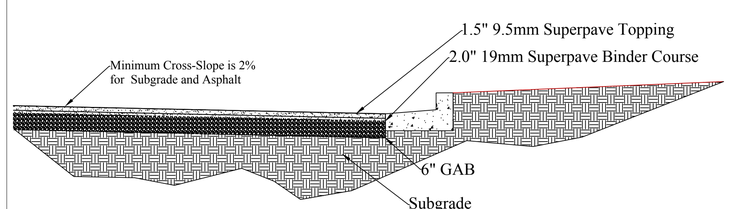

Notes:

1. Proof-roll required to be done in presence of City representative for both final Subgrade and GAB.
2. Proof-rool must be done with tandum dump truck loaded with minimum 18-tons of stone. Load ticket must be provided.
3. Any areas not passing proof-roll shall be dug up and repaired to City satisfaction.
4. Fill used to build up Subgrade shall be compacted and tested according to latest specifications in Peachtree City Local Design Manual.
5. French drains may be required in all sags in the roadway and in other areas determined by City Engineer.
6. Prime and tac will be required according to latest Georgia Department of Transportation (GDOT) specifications.
7. All permanent striping will be thermoplastic meeting latest GDOT specifications.

Village/Neighborhood Collector and Commercial Paving Section

General Notes

No.	Revision/Issue	Date
1.0	Issued	11/16/2016

Seal/Date

Firm Name and Address

Peachtree City Engineering Department

PEACHTREE CITY PLAN TO STAY

Project Name and Address

Village Collector, Neighborhood Collector and Commercial Road Details

Project: City Details

Date

Scale: N.T.S.

Sheet: 1 of 1

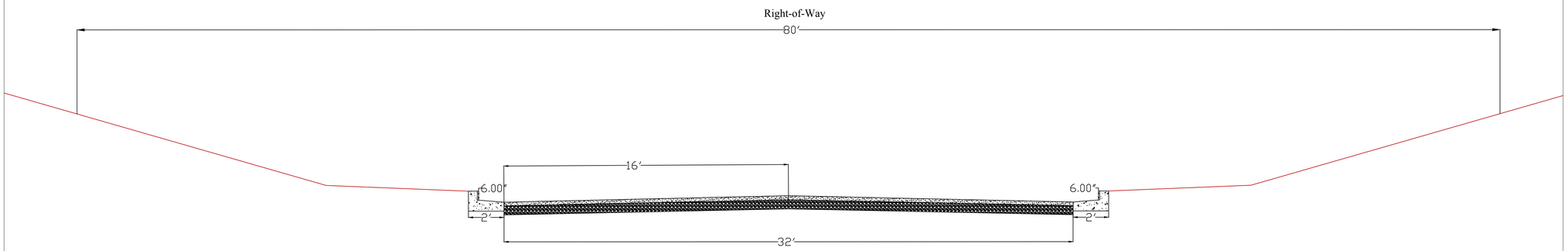

NOTES:
1. Utility Locations are measured from back of curb or edge of pavement.
2. Power, Phone and Cable TV shall use joint trenches if at all possible.
3. Keep Gas and Water on opposite sides of the road.
4. Pavement widths and rights-of-ways vary according to road classification. This detail is for Community Collectors and Industrial Streets.

Standard Cross-Section

Notes:
1. All signage must meet current MUTCD standards.
2. Signs shall be an aluminum backed sign a minumum of $\frac{1}{8}$" thick.
3. Minimum letter sizes shall be 6" capital letters and $4\frac{1}{2}$" for lower case for Street Name Signs on streets ≤ 40 mph.
4. Street Name Signs shall be white letters on brown background.
5. The back of all signs shall be painted brown.

Standard Sign Locations

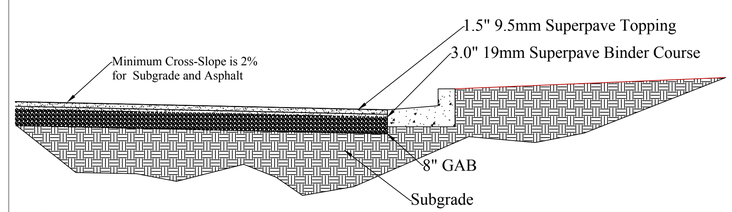

Notes:
1. Proof-roll required to be done in presence of City representative for both final Subgrade and GAB.
2. Proof-rool must be done with tandum dump truck loaded with minimum 18-tons of stone. Load ticket must be provided.
3. Any areas not passing proof-roll shall be dug up and repaired to City satisfaction.
4. Fill used to build up Subgrade shall be compacted and tested according to latest specifications in the Peachtree City Local Design Manual.
5. French drains may be required in all sags in the roadway and in other areas determined by City Engineer.
6. Prime and tac will be required according to the latest Georgia Department of Transportation (GDOT) specifications.
7. All permanent striping will be thermoplastic meeting latest GDOT specifications.

Community Collector/Industrial Street Paving Section

General Notes

No.	Revision/Issue	Date
1.0	Issued	11/2016

Seal/Date

Firm Name and Address
Peachtree City
Engineering Department
PEACHTREE CITY
PLAN TO STAY

Project Name and Address
Community Colletor and
Industrial Street Details

Project: City Details
Date:
Scale: N.T.S.
Sheet: 1 of 1